

DL5.0C

USER MANUAL

Battery Module
51.2V/100Ah

File version-20231114-V2-EN Information might be subject to change without notice during product improving.

Contents

Statement of Law 1
Revision History 1
Safety Precautions 2
Preface 3
Manual declaration 3
1 Introduction 4
Brief Introduction 4
Product Properties 4
Product Identity Definition 5
2 Product Specification 6
Size and Weight 6
Performance Parameter 6
Interface Definition 6
Battery Management System(BMS) 11
3 Installation and Configuration 13
Preparation for installation 13
Equipment Installation 16
4 Use, Maintenance and Troubleshooting 26
Battery system usage and operation instructions 26
Alarm description and processing 26
Analysis and treatment of common faults 27

©Dyness reserves the copyright of this document

Statement of Law

Copyright of this document belongs to Dyness Digital Energy Technology Co., LTD.
No part of this documentation maybe excerpted, reproduced, translated, annotated or duplicated in any form or by any means without the prior written permission of Dyness Digital Energy Technology Co., LTD.All Rights Reserved.

This product complies with the design requirements of environmental protection and personal safety. The storage, use and disposal of the products shall be carried out in accordance with the product manual, relevant contract or relevant laws and regulations.

Customer can check the related information on the website of Dyness Digital Energy Technology Co., LTD. when the product or technology is updated.

Web URL: http://www.dyness.com/

Please note that the product can be modified without prior notice.

Revision History

Revision NO.	Revision Date	Revision Reason
1.0	2023.02.28	First Published
2.0	2023.05.18	Product Modification

Safety Precautions

WARNING

Please do not put the battery into water or fire, in case of explosion or any other situation that might endanger your life.
Please connect wires properly while installation, do not reverse connect.
To avoid short circuit, please do not connect positive and negative poles with conductor on the same device.
Please avoid any form of damage to battery, especially stab, hit, trample or strike.
Please shut off the power completely when removing the device or reconnecting wires during the daily use or it could cause the danger of electric shock.
Please use dry powder extinguisher to put out the flame when encountering a fire hazard, liquid extinguisher could result in the risk of explosion.
For your safety, please do not arbitrarily dismantle any component in any circumstances. The maintenance must be implemented by authorized technical personnel or our company's technical support. Device breakdown due to unauthorized operation will not be covered under warranty.

CAUTION

Our products have been strictly inspected before shipment. Please contact us if you find any abnormal phenomena such as device outer case bulging.
The product shall be grounded properly before use in order to ensure your safety.
To assure the proper use please make sure parameters among the relevant device are compatible and matched.
Please do not mixed-use batteries from different manufacturers, different types and models, as well as old and new together.
Ambient and storage method could impact the product life span, please comply with the operation environment instruction to ensure device works in proper condition.
For long-term storage, the battery should be recharged once every 6 months, and the amount of electric charge shall exceed 80% of the rated capacity.
Please charge the battery in 18 hours after it fully discharged or over-discharging protection mode is activated.
Formula of theoretical standby time: T=C/I (T is standby time, C is battery capacity, I is total current of all loads).

©Dyness reserves the copyright of this document

Preface

Manual declaration

DL5.0C lithium iron phosphate battery energy storage system can provide energy storage for photovoltaic power generation users through parallel combination. Our product can store extra electricity into battery from photovoltaic power generation system in daytime and supply stable power to user's equipment as power backup at nighttime or any time when needed. It can improve the efficiency of photovoltaic power generation and increase the electric power efficiency by peak load shifting.

This user manual details the basic structure, parameters, basic procedures and methods of installation and operation and maintenance of the equipment.

©Dyness reserves the copyright of this document

1 Introduction

Brief Introduction

DL5.0C lithium iron phosphate battery system is a standard battery system unit, customers can choose a certain number of DL5.0C according to their needs, by connecting parallel to form a larger capacity battery pack, to meet the user's long-term power supply needs. The product is especially suitable for energy storage applications with high operating temperatures, limited installation space, long power backup time and long service life.

Product Properties

DL5.0C energy storage product's positive electrode materials are lithium iron phosphate, battery cells are managed effectively by BMS with better performance, the system's features as below:

- Comply with European ROHS, Certified SGS, employ non-toxic, non-pollution environment-friendly battery.
- Anode materials are lithium iron phosphate (LiFePO4), safer with longer life span.
- Carries battery management system with better performance, possesses protection function like over-discharge, over-charge, over-current, abnormal temperature.
- Self-management on charging and discharging, Single core balancing function.
- Intelligent design configures integrated inspection module.
- Flexible configurations allow parallel of multi battery for longer standby time.
- Self-ventilation with lower system noise.
- Less battery self-discharge, then recharging period can be up to 10 months during the storage.
- No memory effect so that battery can be charged and discharged shallowly.
- With wide range of temperature for working environment, -20°C~ +55°C, circulation span and discharging performance are well under high temperature.
- Less volume, lighter weight.

©Dyness reserves the copyright of this document

Product Identity Definition

Table 1-1 Symbol Definition

	Battery voltage is higher than safe voltage, direct contact with electric shock hazard.
	inflammable.
	Read the user manual before using.
	The scrapped battery cannot be put into the garbage can and must be professionally recycled.
	After the battery life is terminated, the battery can continue to be used after it recycled by the professional recycling organization and do not discard it at will.
	Do not place near open flame or incinerate.
	If catch fire, do not put out with water.
	If catch fire, do not put out with dry powder fire extinguisher.
	Do not cut or spear with sharp objects.
	This battery product meets European directive requirements.



Figure 1-1 Battery Module Label

©Dyness reserves the copyright of this document

2 Product Specification

Size and Weight

Table 2-1 DL5.0C Device size

Product	Nominal Voltage	Nominal Capacity	Dimension	Weight
DL5.0C	DC51.2V	100Ah	558×545×150mm	54kg

Performance Parameter

Table 2-2 DL5.0C performance parameter

Item	Parameter value
Nominal Voltage(V)	51.2
Work Voltage Range(V)	44.8~57.6
Nominal Capacity(Ah)	100
Nominal Energy(kWh)	5.12
Recommended Charge/Discharge Current (A)	50
Max Power Continuous Charge Current (A)	75
Max Power Continuous Discharge Current (A)	100
Peak Power Charge/Discharge Current (A)	110 (15S)
Recommend Charge Voltage (Vdc)	56.5

Interface Definition

This section elaborates the interface functions of the front interface of the device.

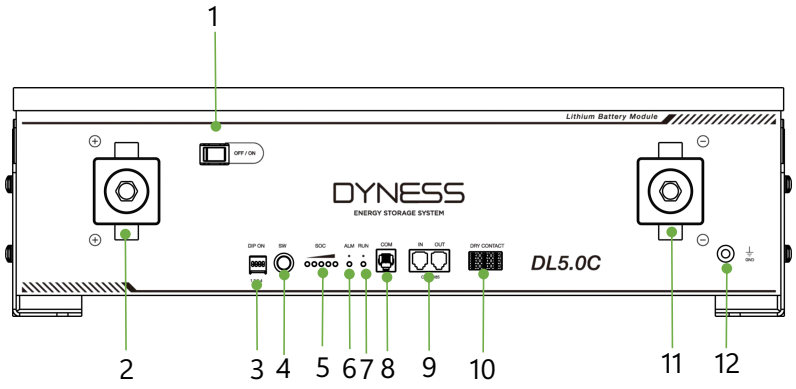

Figure 2-1 The Sketch of Interface

©Dyness reserves the copyright of this document

Table 2-3 Interface Definition

Item	Name	Definition
1	Power switch	OFF/ON, must be in the "ON" state when in use
2	Positive socket	Battery output positive or parallel positive line
3	ADD	DIP switch
4	SW (battery wake/sleep switch)	When the "OFF/ON" switch button is in the ON state, press and hold this button for 3 seconds to put the battery into the power-on or off state.
5	SOC	The number of green lights shows the remaining power. Table 2-3 for details.
6	ALM	Red light flashing when an alarm occurs, red light always on during protection status. After the condition of trigger protection is relieved, it can be automatically closed.
7	RUN	Green light flashing during standby and charging mode. Green light always on when discharging.
8	COM	Communication cascade port, support RS232
9	CAN/485	Communication cascade port, support CAN/ RS485 communication (factory default CAN communication)
10	DRY CONTACT	/
11	Negative socket	Battery output negative or parallel negative line
12	Grounding	Shell ground connection

Table 2-4 DIP switch definition and description

DIP switch position (master communication protocol and baud rate selection)			
#1	#2	#3	#4
Define different protocols; Distinguish between master and slave			Baud rate selection OFF： CAN: 500K,485: 9600 ON： CAN: 250K,485: 115200

DIP Switch Description
When the batteries are connected in parallel, the host communicates with the slaves through the CAN interface. The host summarizes the information of the entire battery system and communicates with the inverter through CAN or 485. If the master is the latest DL5.0C battery with DIP switch: 1. The communication cable from the master CAN IN to the inverter comm port should be the correct one.

©Dyness reserves the copyright of this document

DIP Switch Description

2. When the battery works with GOODWE, Solis, LUX, Sofar, DEYE(Sunsynk), VICTRON, IMEON, Sungrow, SMA, RENAC, DELIOS, SAJ(CAN Comm) before starting the battery, you need to put the master DIP switch "# 3" to the "ON" position (to the top), then turn on the batteries.



Master Setting 1

3. If the battery communicates with the Axpert-king/VMIII/MAX, Infinisolar, Growatt SPH/SPA(CAN comm) GMDE, turn the master DIP switch "#2" to "ON" position.

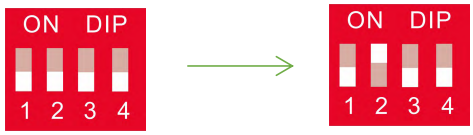

Master Setting 2

4. If the battery communicates with the Growatt SPF HVM-P/ES/WPV by RS485 communication, turn the master DIP switch "#2" and "#3" to "ON".

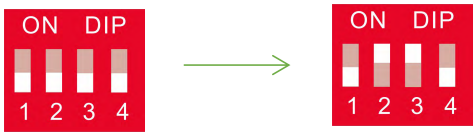

Master Setting 3

5. If the battery communicates with the Schneider Conext Series, turn the master DIP switch "#1" and "#3" to "ON".

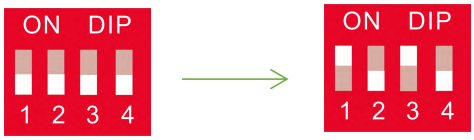

Master Setting 4

6. When you setup the master DIP as setting 1~4, all the slaves keep the DIP 0000,no need to change.

7. If the energy storage system has only one DL5.0C, it is the master itself, and still follow the above steps.

Note: For more information of matching inverter brands, please subject to the latest document

<The list of compatibility between Dyness ESS and Inverters >.

©Dyness reserves the copyright of this document

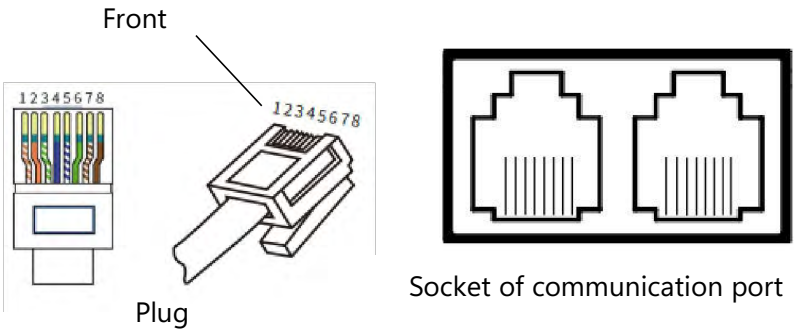

Figure 2-2 CAN/485 Interface Definition

Table 2-5 Pin Definition

Foot position	Color	Definition
PIN1	Orange/white	485B
PIN2	Orange	485A
PIN3	Green/white	Reserve
PIN4	Blue	EXT CANH
PIN5	Blue/white	EXT CANL
PIN6	Green	Reserve
PIN7	Brown/white	INT CANH
PIN8	Brown	INT CANL
PIN9	Orange/white	Reserve
PIN10	Orange	Reserve
PIN11	Green/white	Reserve
PIN12	Blue	Reserve
PIN13	Blue/white	Reserve
PIN14	Green	Reserve
PIN15	Brown/white	INT CANH
PIN16	Brown	INT CANL

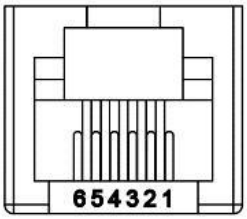

Figure 2-3 COM Interface Definition

©Dyness reserves the copyright of this document

Table 2-6 COM Interface Definition

Foot position	Definition
PIN1	5V
PIN2	GND
PIN3	TXD
PIN4	RXD
PIN5	GND
PIN6	Reserve

Tips: Please pay attention of the communication com definition of inverter, in order to avoid voltage in the port to affect communication.

Table 2-7 LED Status Indicators

Battery Status	SOC(%)	LED1	LED2	LED3	LED4	LED5	ALM	RUN
Shutdown	/	off	off	off	off	off	off	off
Standby	80%≤SOC≤100%	●	●	●	●	●	off	Flashing
	60%≤SOC < 80%	●	●	●	●	off	off	Flashing
	40%≤SOC < 60%	●	●	●	off	off	off	Flashing
	20%≤SOC < 40%	●	●	off	off	off	off	Flashing
	0% < SOC < 20%	●	off	off	off	off	off	Flashing
	SOC=0	off	off	off	off	off	off	Flashing
Charging	80%≤SOC≤100%	●	●	●	●	Flashing	off	Flashing
	60%≤SOC < 80%	●	●	●	Flashing	off	off	Flashing
	40%≤SOC < 60%	●	●	Flashing	off	off	off	Flashing
	20%≤SOC < 40%	●	Flashing	off	off	off	off	Flashing
	0% < SOC < 20%	Flashing	off	off	off	off	off	Flashing
	SOC=0	Flashing	off	off	off	off	off	Flashing
Discharging	80%≤SOC≤100%	●	●	●	●	●	off	●
	60%≤SOC < 80%	●	●	●	●	off	off	●
	40%≤SOC < 60%	●	●	●	off	off	off	●
	20%≤SOC < 40%	●	●	off	off	off	off	●
	0% < SOC < 20%	●	off	off	off	off	off	●
	SOC=0	off	off	off	off	off	off	●

A special ALM light flashing state: when the communication between batteries is lost or abnormal,all the lights from SOC to RUN of the master battery will flash together.

● means green light always on

● means red light always on

Flashing: means green light flashing or red light flashing

©Dyness reserves the copyright of this document

Battery Management System(BMS)

Voltage Protection

Low Voltage Protection in Discharging:

When any battery cell voltage or total voltage is lower than the rated protection value during discharging, the over-discharging protection is activated, and the battery buzzer makes an alarm sound. Then battery system stops supplying power to the outside. When the voltage of each cell back to rated return range, the protection is over.

Over Voltage Protection in Charging:

Battery will stops charging when total voltage or any battery cell voltage reaches the rated protection value during charging stage. When total voltage or all cell back to rated range, the protection is over.

Current Protection

Over Current Protection in Charging:

When the charge current > 90A, current limit protection mode is activated, current will be limited to≤3A, protection is removed after rated time delaying 10S. Circulate like this until the current is lower than 90A.

Over Current Protection in Discharging:

When the discharge current is higher than 110A, the battery buzzer alarms and the system stops discharging after 15s. After protection, the discharging will restore in 60s delay or immediately when there is charging current.

CAUTION

The buzzer sound alarm setting can be manually turned off on the background software, and the factory default is on.

Temperature Protection

Low/Over temperature protection in charging:

When battery's temperature is beyond range of 0ºC~+55ºCduring charging, temperature protection is activated, device stops charging.

The protection is over when temperature back to rated working range.

Low/Over temperature protection in discharging:

When battery's temperature is beyond range of -20ºC~+55ºC during discharging, temperature protection is activated, device stops supplying power to the outside.

The protection is over when temperature back to rated working range.

Other Protection

Short Circuit Protection:

When the battery is activated from the shutdown state, if a short circuit occurs, the system starts short-circuit protection for 60 seconds.

Self-Shutdown:

When device connects no external loads and power supply and no external communication for over 72 hours, device will dormant standby automatically.

©Dyness reserves the copyright of this document

CAUTION

Battery's maximum discharging current should be more than load's maximum working current.

©Dyness reserves the copyright of this document

3 Installation and Configuration

Preparation for installation

Safety Requirement

This system can only be installed by personnel who have been trained in the power supply system and have sufficient knowledge of the power system.

The safety regulations and local safety regulations listed below should always be followed during the installation.

- All circuits connected to this power system with an external voltage of less than 51.2V must meet the SELV requirements defined in the IEC60950 standard.
- If operating within the power system cabinet, make sure the power system is not charged. Battery devices should also be switched off.
- Distribution cable wiring should be reasonable and has the protective measures to avoid touching these cables while operating power equipment.
- The following protective items must be worn when installing the battery system:

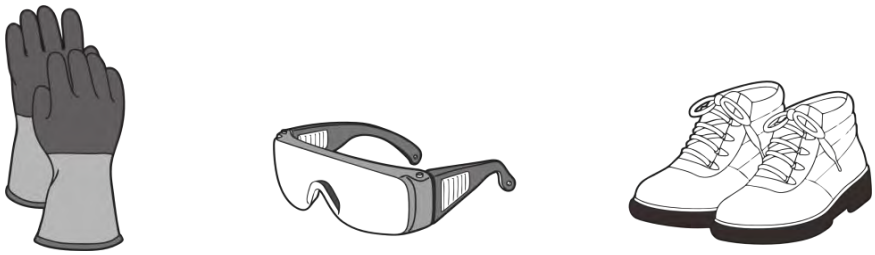

Insulated Gloves　　Safety Goggles　　Safety Shoes

Figure 3-1 Safety Gear

Environmental requirements

Working temperature: -20ºC ~+55ºC

Charging temperature range is 0ºC~+55ºC,

Discharging temperature range is -20ºC ~+55ºC

Storage temperature: -10ºC~+35ºC

Relative humidity: 5% ~ 85%RH

Elevation: no more than 4000m

Operating environment: Indoor installation, sites avoid the sun and no wind, no conductive dust and corrosive gas.

And the following conditions are met:

- Installation location should be away from the sea to avoid brine and high humidity environment.
- The ground for product arrangement shall be flat and level.
- No flammable explosive materials near the installation site.
- The optimal ambient temperature is 15ºC~30ºC
- Keep away from dust and messy zones

Tools and data

Tools and meters that may be used are shown in Figure 3-2 Installation Tools.

©Dyness reserves the copyright of this document

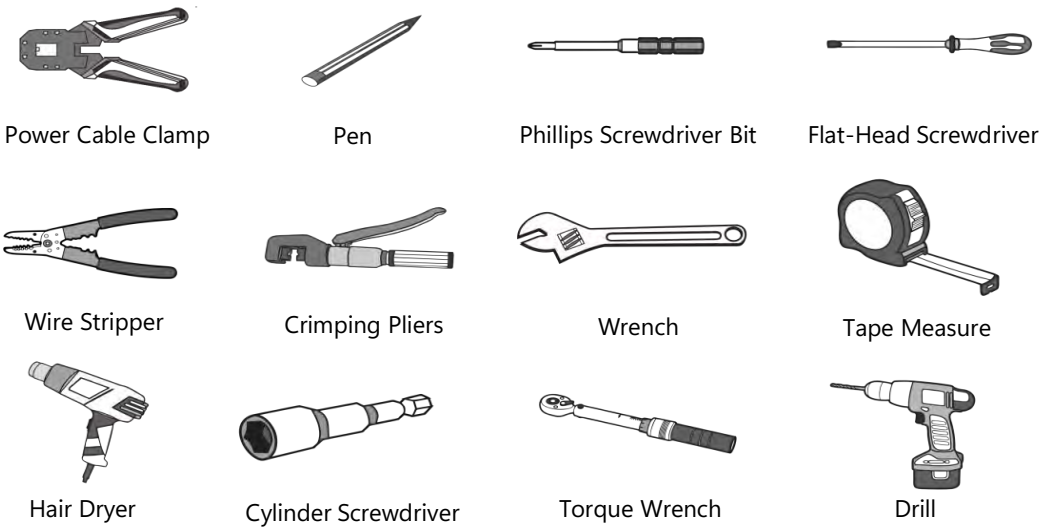

Figure 3-2 Installation Tools

Technical preparation

Electrical interface check

Devices that can be connected directly to the battery can be user equipment, power supplies, or other power supplies.

- Confirm whether the user's PV power generation equipment, power supply or other power supply equipment has a DC output interface, and measure whether the DC power output voltage meets the voltage range requirements in Table 2-2.
- Confirm that the maximum discharge current capability of the DC power interface of the user's photovoltaic power generation equipment, power supply or other power supply equipment should be less than the maximum charging current of the products used in Table 2-2.
- If the maximum discharge capability of the DC power interface of the user's photovoltaic power generation equipment is higher than the maximum charging current of the products used in Table 2-2, the DC power interface of the user's photovoltaic power generation equipment shall have a current limiting function to ensure the normal operation of the user’s equipment.
- Verify that the maximum operating current of the battery-powered user equipment (inverter DC input) should be less than the maximum discharge current of the products used in Table 2-2.

The security check

- Firefighting equipment should be provided near the product, such as portable dry powder fire extinguisher.
- Automatic fire fighting system shall be provided for the case where necessary.
- No flammable, explosive and other dangerous materials are placed beside the battery.

©Dyness reserves the copyright of this document

Unpacking Inspection

- When the equipment arrives at the installation site, loading and unloading should be carried out according to the rules and regulations, to prevent from being exposed to sun and rain.
- Before unpacking, the total number of packages shall be indicated according to the shipping list attached to each package, and the case shall be checked for good condition.
- In the process of unpacking, handle with care and protect the surface coating of the object.
- Open the package, the installation personnel should read the technical documents, verify the list, according to the configuration table and packing list, ensure objects are complete and intact, if the internal packing is damaged, should be examined and recorded in detail.

Table 3-1 Packing List

Item	Specification	Quantity	Figure
Battery-DL5.0C	51.2V/100Ah	1	
Parallel cable-positive	Red /4AWG/L250mm	1	
Parallel cable-negative	Black /4AWG/L250mm	1	
Communication parallel cable	Black /L500mm/Double RJ45 plug	1	
Communication cable-to inverter	Black /L2000mm /Double RJ45 plug	1	
Ground wire	L500mm,4mm²	1	
User Manual	User manual	1	
Screw	Screws M6	8	
Expansion screw	Expansion screw	8	

©Dyness reserves the copyright of this document

cardboard	Positioning cardboard	1	
Battery bracket	Battery bracket	1	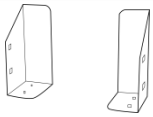
Fixing bracket	Fixing bracket	1	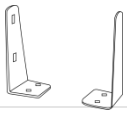

Engineering coordination

- Attention should be paid to the following items before construction:
- Power line specification.
- The power line specification shall meet the requirements of maximum discharge current for each product.
- Mounting space and bearing capacity.
- Make sure that the battery has enough room to install, and that the brackets have enough load capacity.
- Wiring.
- Make sure the power line and ground wire are reasonable. Not easy to short-circuit, water and corrosion.

Equipment Installation

Table 3-2 Installation steps

Step 1 Installation preparation
Confirm that the ON/OFF switch on the front panel of DL5.0C unit is in the "OFF" state to ensure no live operation. 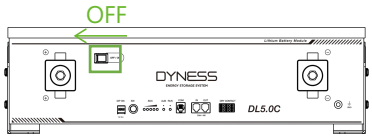
Step 2 Mechanical installation
1. Battery placement position determination 2. Battery module installation
Step 3 Electrical installation
1. Ground cable installation 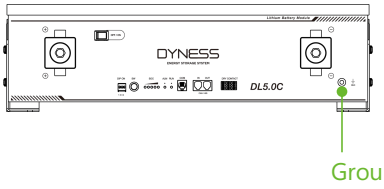 2. Battery module parallel cable installation

©Dyness reserves the copyright of this document

3. Parallel communication cable connection

Step 4 Battery system self-test

1. Turn the ON/OFF switch to the "ON" state.

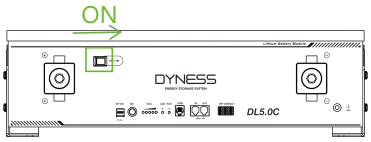

2. Press SW button 3secs to wake up battery.

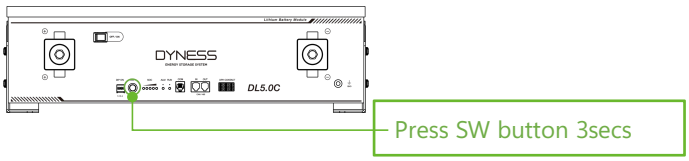

3. Check the system output voltage and led status

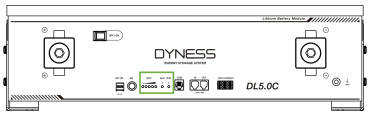

4. Shut down the system

Step 5 Connecting inverter

1. Connect total positive & total negative cable of the battery system to the inverter.

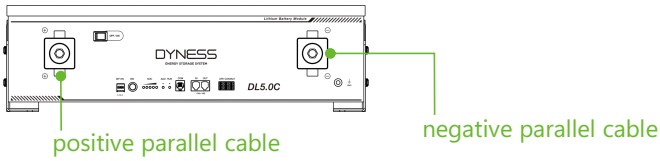

2. Battery module total positive cable installation
3. Battery module total negative cable installation
4. Connect the communication cable from the master CAN IN to the inverter



5. Turn on the Power switch and wake up system by SW button.

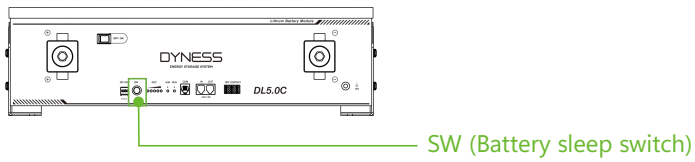

6. Close the DC breaker between inverter and battery.
7. Turn on the inverter and check the communication between inverter and battery system.

©Dyness reserves the copyright of this document

Installation Preparation

1. Prepare equipment and tools for installation.
2. Check the DL5.0C unit and confirm that the ON/OFF switch is in the "OFF" state to ensure the device is shut off.

Mechanical Installation

Flexible Brackets Installation(Up to six layers):

1. DL5.0C brackets The DL5.0C bracket is shown before installation as shown in Figure 3-3.

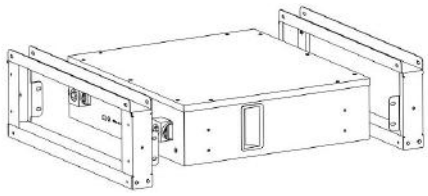

Figure 3-3

2. Place the DL5.0C and brackets as shown in the figure3-3, and insert the DL5.0C into the brackets. Each bracket is connected to the module by four screws, two screws on one side. As shown in Figure3-4.

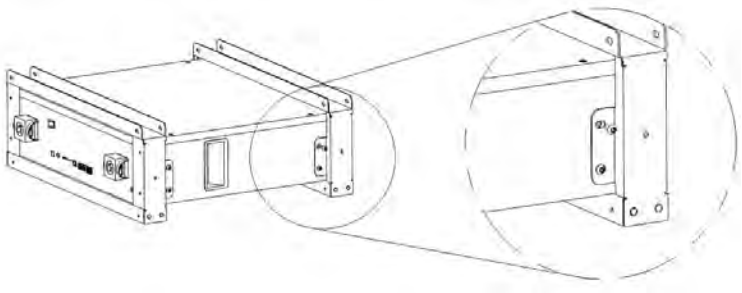

Figure 3-4

3. Install another module as the same method,don't tighten the screw first, put it on top of the first battery,as shown in Figure3-5.

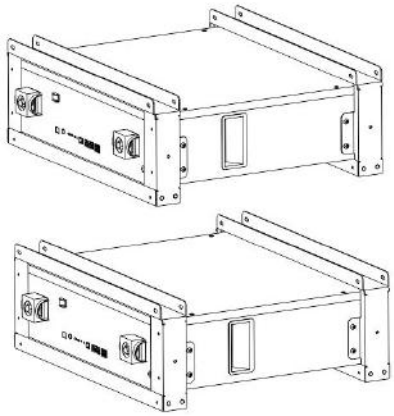

Figure 3-5

©Dyness reserves the copyright of this document

4. Install all screws according to the hole position and there are screws on the front and back need to be fixed.

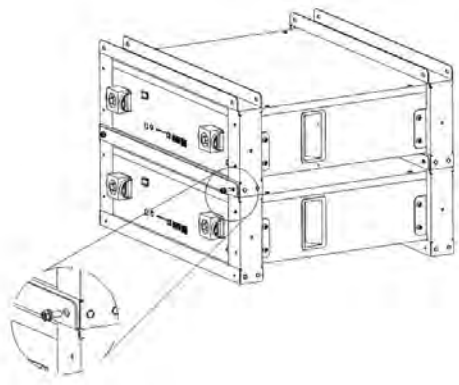

Figure 3-6

5. Stack the required number of battery and bracket combinations as described above, and fix the screws,twisting force keeps 9.8N·m. Shown as Figure3-7.

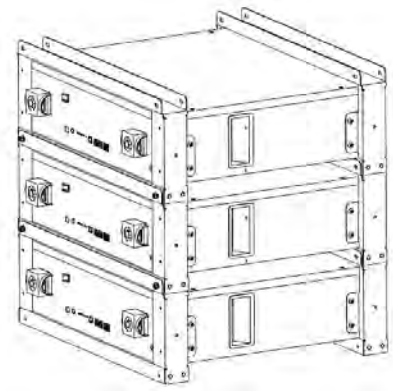

Figure 3-7

Wall hanging Installation method:

1. Use the positioning cardboard (provided in accessory package) and mark the screw hole positions on the wall. Shown as Figure 3-8.

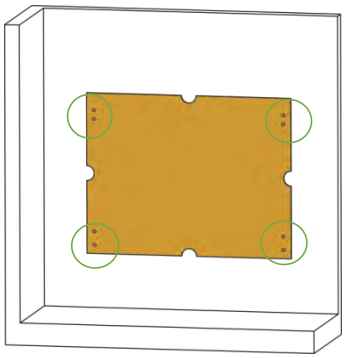

Figure 3-8

©Dyness reserves the copyright of this document

2. The cardboard must be perpendicular to the ground while drawing the holes.
3. The bottom of the cardboard is about 300mm from the ground.
4. According to the position of the mark, 8 holes in diameter 10mm and depth of more than 70mm are hit on the wall with an electric drill, which are used for fitting expansion bolt M6.
5. Fixing the expansion bolt M6 into the bottom of the hole on the wall, and fix the Support bracket and Battery bottom bracket on the wall with M6 bolts. Twisting force keeps 9.8N·m.

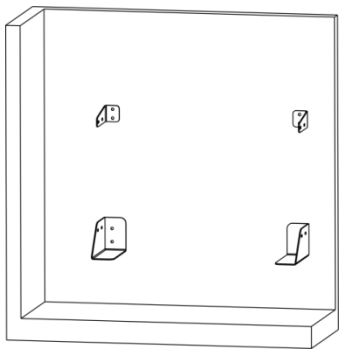

Figure 3-9

6. Carry or hoist the battery box to the installed Battery bottom bracket. Fixing the Support bracket and the upper part of the battery box with M6 bolts, twisting force keeps 9.8N·m.Then fixing the Battery bottom bracket and the bottom part of the battery box with M6 bolts. Twisting force keeps 9.8N·m.

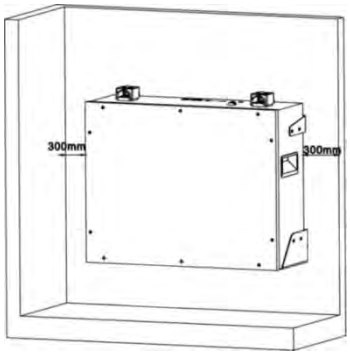

Figure 3-10

Floor Standing Installation Method:

When the battery system is placed directly on the ground, a fixed support must be used to fix the top of the battery box on the wall

1. Use the positioning cardboard (provided in accessory package) and mark the screw hole positions on the wall, as shown four holes in the picture on the left.

©Dyness reserves the copyright of this document

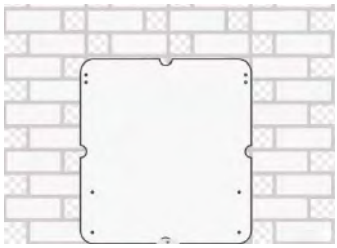

Figure 3-11

2. The bottom of the board must be in horizontal touch with the ground while marking the holes.

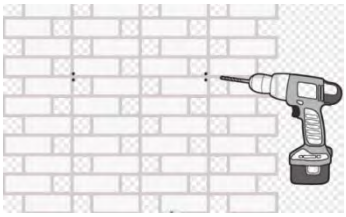

Figure 3-12

3. According to the marked position, use an electric drill to drill 4 holes with a diameter of 10mm on the wall for installing M6 expansion bolts. The depth of the holes should be greater than 70mm.
4. Fixing the expansion bolt M6 into the bottom of the hole on the wall.
5. Use the M6 bolt to fixing the Support bracket to the wall and control the torque at 6NM.



Figure 3-13

6. Carry the battery box to the installation site, and place it about 15mm away from the wall surface, fixing the Support bracket and the cabinet.

©Dyness reserves the copyright of this document



Figure 3-14

Electrical installation

Before connecting the power cables, use multimeter to measure cable continuity, short circuit, confirm positive and negative, and accurately mark the cable labels.

Measuring methods:

Power cable check: select the buzzer mode of multimeter and detect the both ends of the same color cable. If the buzzer calls, it means the cable is in good condition.

Short circuit judgment: choose multimeter resistor file, probe the same end of positive and negative pole, if the resistor shows infinity, means that the cable is available.

After visual testing of power line connection, the positive and negative poles of the battery shall be connected respectively to the positive and negative poles of the opposite terminal.

It is better to add a circuit breaker between the inverter and the battery system. The selection of the circuit breaker requires:

Voltage: U>60V

Current: I =Inverter power/45V

The circuit breaker is installed between the battery module and the inverter, as shown in Figure 3-15:

©Dyness reserves the copyright of this document

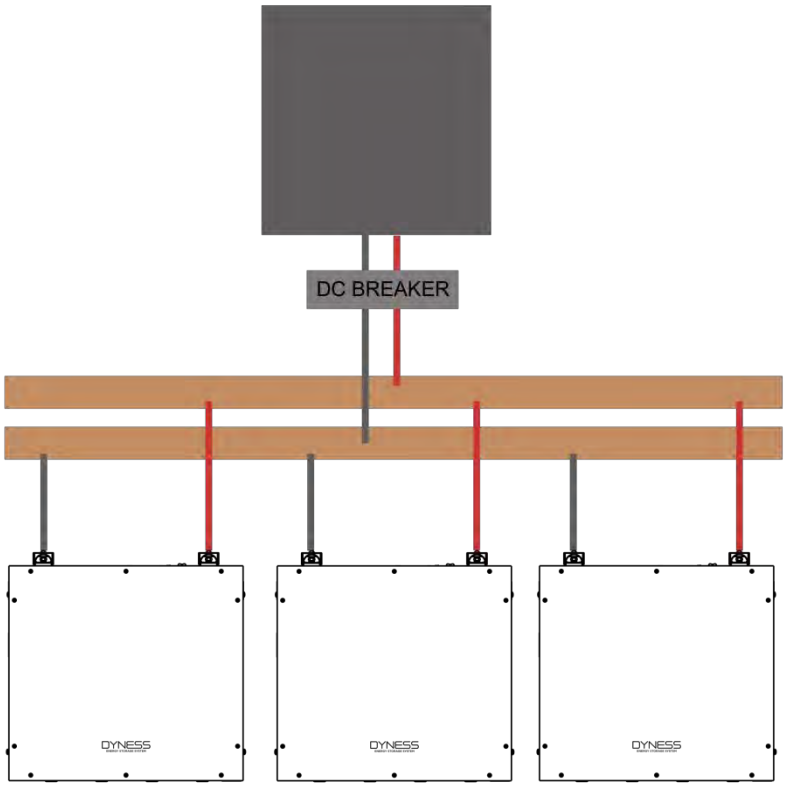

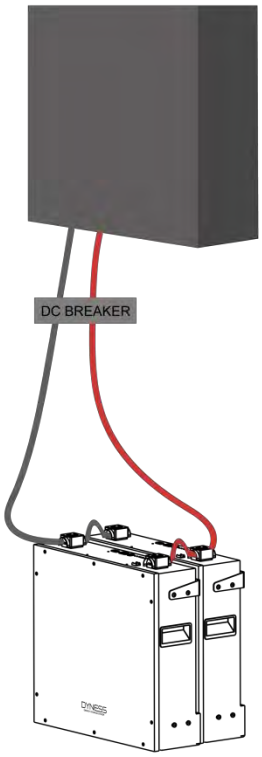

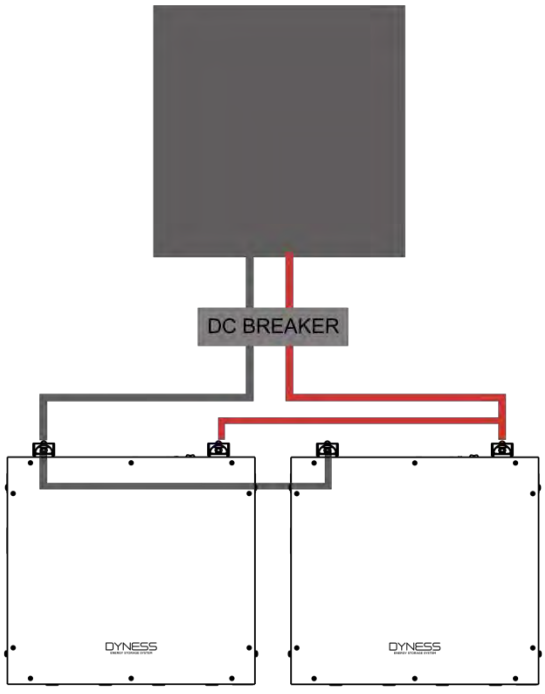

©Dyness reserves the copyright of this document

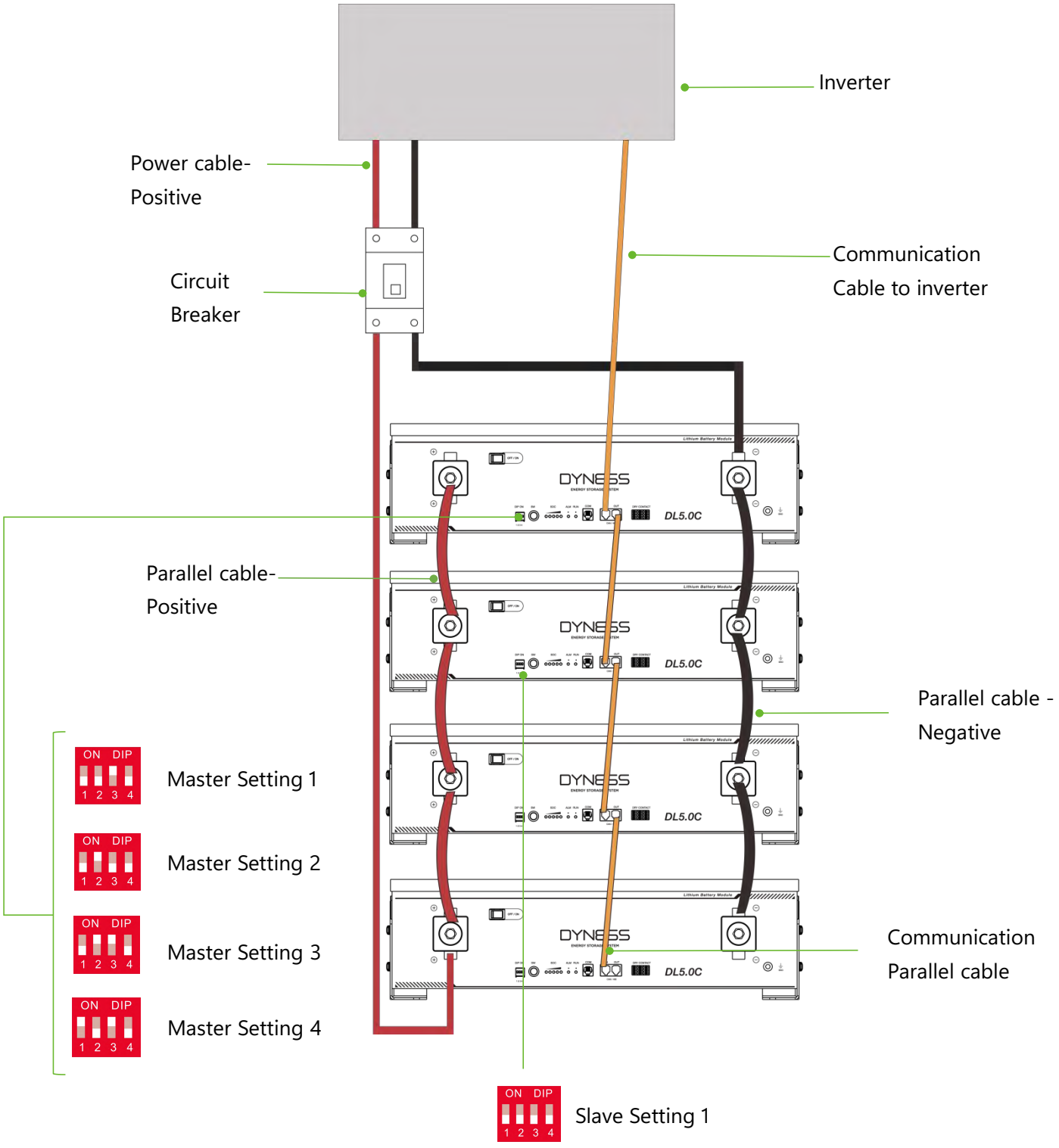

Figure 3-15

Note:

1. For more ADD Settings， please refer to P7 “DIP switch definition and description”

©Dyness reserves the copyright of this document

2. After the whole system connection, set the master DIP mode according to the inverter model firstly, then start the battery.
3. The BAT-INV comms cable is from inverter comm port to master CAN IN port, BAT-BAT cable is from master CAN OUT to slave1 CAN IN, slave1 CAN OUT to slave2 CAN IN...
4.The limited continuous current for each pair of power cable is 120A. Please add power cable according to the proportion if the max. working current of the inverter is more than 120A.

Battery parameter settings on the inverter

Max Charging(Bulk) Voltage: 56.5V
Absorption Voltage: 56V
Float Voltage: 55.5V
Shut Down(cut off) Voltage: 48~50V
Shut Down(cut off) SOC: 10%
Restart Voltage: 52V
Recommended Charge Current : 50A*BATTERY Qty
Recommended Discharge Current : 50A*BATTERY Qty

Register on the website after installation

After the battery system installation is completed and the running is normal, you need to log in to the DYNESS official website to register the product installation and use information to make the product warranty effective. Please follow the instructions on the website to register.

http://www.dyness-tech.com/ → Service → Sign Up

©Dyness reserves the copyright of this document

4 Use, Maintenance and Troubleshooting

Battery System Usage and Operation Instructions

After completing the electrical installation, follow these steps to start the battery system. Refer to P7 DIP Switch Description to prepare the battery module before starting up, then press the ON/OFF button to the ON position, press and hold the SW button for 3 seconds.

After the indicator self-test, the RUN indicator will light and the SOC indicator will be on



Figure 4-1

CAUTION

After pressing the power button, if the battery status indicator on the front panel continues to be red, please refer to the "P24 Alarm description and processing ". If the failure cannot be eliminated, please contact the dealer timely.

Use a voltmeter to measure whether the voltage of the circuit breaker battery access terminal is higher than 44.8V, and check whether the voltage polarity is consistent with the inverter input polarity. If the circuit breaker battery input terminal has a voltage output and is greater than 44.8V, then the battery begun to work normally.

After confirming that the battery output voltage and polarity are correct, turn on the inverter, close the circuit breaker.

Check if the indicator of the inverter and battery connection (communication indicator and battery access status indicator) is normal. If it is normal, successfully complete the connection between the battery and the inverter. If the indicator light is abnormal, please refer to the inverter manual for the cause or contact the dealer.

Alarm Description and Processing

When protection mode is activated or system failure occurred, the alarm signal will be given through the working status indicator on the front panel of the DL5.0C. The network management can query the specific alarm categories.

If the fault such as single cell over voltage, charging over-current, under-voltage protection, high-temp protection and other abnormalities which affects the output, please deal with it according to Table 4-1.

Table 4-1 Main Alarm and Protection

Statue	Alarm category	Alarm indication	Processing
Charge state	Over-current	RED Buzzer start	Stop charging and find out the cause of the trouble
	High temp	RED	Stop charging

©Dyness reserves the copyright of this document

Statue	Alarm category	Alarm indication	Processing
Discharge state	Over-current	RED Buzzer start	Stop discharging and find out the cause of the trouble
	High temp	RED	Stop discharging and find out the cause of the trouble
	Total voltage undervoltage	RED Buzzer start	Start charging
	Cell voltage undervoltage	RED Buzzer start	Start charging

Analysis and Treatment of Common Faults

Analysis and treatment of common faults in the Table 4-2:

Table 4-1 Analysis and Treatment of Common Faults

No.	Fault phenomenon	Reason analysis	Solution
1	The indicator does not respond after the power on	Total voltage lower than 35V	Check the total voltage
2	No DC output	Battery data status is abnormal. Battery gets into over-discharged protection	Read the battery information on the monitor.
3	The DC power supply time is too short	Battery capacity become smaller	Storage battery replacement or add more modules
4	The battery can't be fully charged to 100%	Charging voltage is too low	Adjust charging voltage at 56.5V or 57V
5	The power cable sparks once power on and ALM light RED	Power connection short-circuit	Turn off the battery, check the cause of the short circuit
6	Communication fault	The DIP setting of the host is wrong/ the battery type of the inverter is wrong/ Communication cable used incorrectly/The communication cable is incorrectly connected at the battery communication port or the inverter communication port/The	Check these possible causes one by one

©Dyness reserves the copyright of this document

No.	Fault phenomenon	Reason analysis	Solution
		battery firmware version is too low to support the inverter	

If you need any technical help or have any question, please contact the dealer in time.

©Dyness reserves the copyright of this document

DISCOVER YOUR NATURE

Address: No. 511 Chenzhuang West Road, Sanshui Street,
Jiangyan District, Taizhou City
Email: service@dyness-tech.com
Tel: +86 400 666 0655
Web: www.dyness.com

Official Website

Digital version access