EWH SI EEC
EWH SI BE EEC
EWH SI SE EEC

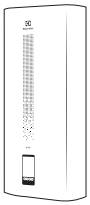

GB · Sealed storage electric water heater · User's manual
AL · Hermetikisht ngrohës uji elektrik me rezervuar · Manuali i përdorimit
PL · Hermetycznie akumulacyjny elektryczny podgrzewacz wody · Instrukcja obsługi
RO · Ermetic încălzitor de apă electric de stocare · Instrucţiuni de exploatare

BG · Херметично акумулиращ електрически бойлер · Ръководство за експлоатация
GR · Σφραγισμένο ηλεκτρικός θερμοσίφωνας αποθήκευσης · Οδηγίες χρήσης
CZ · Hermeticky elektrický akumulační ohřívač vody · Návod k použití

Fill your life with comfort



Get quick access to instructions, additional product information and support at our website
home-comfort.com

Electrolux

CONTENT

1. SAFETY RULES 5
2. DESTINATION 6
3. COMPLETE SET 6
4. DEVICE ARRANGEMENT 7
5. CONTROL PANEL 8
6. WATER HEATER INSTALLATION 11
7. CONNECTING TO THE WATER SUPPLY 11
8. CONNECTING TO THE POWER GRID 12
9. OPERATION 12
10. INSTALLATION DIMENSIONS AND DIMENSIONS 13
11. SPECIFICATIONS 13
12. RCD (GROUND FAULT INTERRUPTER) 13
13. TROUBLESHOOTING 14
14. CARE AND MAINTENANCE 14
15. TRANSPORT AND STORAGE 15
16. RECYCLING 15
17. WARRANTY 15
18. DATE OF MANUFACTURE 15

WE THINK ABOUT YOU

Thank you for purchasing an Electrolux appliance. You have chosen a product, backed by decades of professional experience and innovations.
Unique and stylish, it was created with care for you. Therefore, whenever you use it, you can be sure that the results will always be excellent.
Welcome to Electrolux!
At our website you can:

Find product recommendations, user manuals, maintenance information:
http://www.home-comfort.com/support/

While selling this device, dealer must fill “Product details” section located in the inside of the back cover of this manual.

Designation

Caution/Important safety information

Common information and recommendations

Warranty service is performed according to the terms specified in the “Warranty” section.

Note:

In the text of this manual, the storage electric water heater may have such technical names as appliance, device, etc.

Safety rules

Warning!
Do not use portable outlets. Improper installation and operation of the electric water heater can cause accidents or property damage.

- The power outlet must be securely grounded. The rated current of the power outlet must be at least 10 A. Keep the socket and plug dry at all times to prevent a short circuit in the electrical system.
- The wall on which the water heater is installed must be rated for twice the total weight of the water heater filled with water.
- A safety check valve should be installed at the cold water inlet (see Fig. 1).

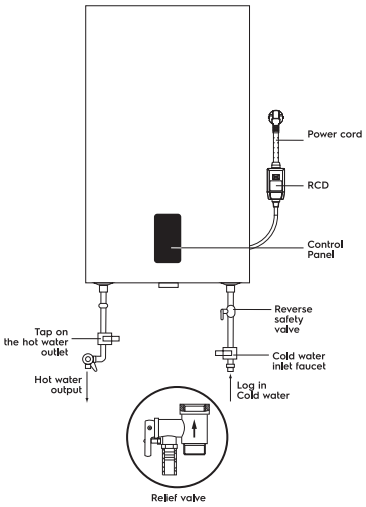

Fig. 1

- When using the water heater for the first time (or when using it for the first time after maintenance or cleaning), do not power up the water heater until it is full. The hot water tap should be opened while filling the water heater tank. While filling the tank of the water heater, open the hot water tap to bleed air. As soon as the tank is filled with water and water flows from the tap, the tap can be closed.
- During water heating, water may come out of the pressure relief vent of the safety relief valve. This is normal. However, in the event of large leaks, contact a service technician. The pressure outlet must never be blocked under any circumstances; Otherwise it may cause the water heater to malfunction.
- The pressure vent on the pressure relief valve (item 3 in Fig. 5) Install a drain tube and lead it to the sewer in case water is drained and excessive pressure is relieved*. The drain tube connected to the pressure outlet must point downward.
- The water temperature inside the water heater can reach up to 75°C. To avoid scalding, you can adjust the water temperature using the mixer tap.

Water Drain:
The water heater must be completely drained if it will not be used for a long time or if the temperature in the room where it is installed may drop below 0°C. Drain can be carried out with the safety valve and there may be leakage under the valve stem.

A tee can be provided for the drain with a valve between the valve and the sleeve (item 1, fig. 5).

Before draining the water heater, don't forget:
- Disconnect the power supply from the device.
- Make sure that the water inside the tank is at a safe temperature.
- Close the cold water supply to the tank by closing the stop valve.
- Shut off the hot and cold water supply water to the apartment.
- Open the hot water supply to the mixer to relieve the pressure inside the tank.
- Open the shutoff valve on the tee fitting on the hot water outlet of the water heater (if a tee fitting has been installed), Otherwise, dismantle the connection pipe at the water heater outlet.
- Connect the drain hose (item 3 in Fig. 5) to the shutoff valve.
- At the tee on the cold water inlet to the water heater and direct it into the sewer, or into the place where the water drains.
- Open the stopcock and wait for the water to drain completely.

* The water expands when heated, which increases the pressure in the water heater. Always use a safety valve to prevent damage to the water heater.

Warning!
The installation of the supplied safety valve is a mandatory requirement. Do not install any shut-off valve between the safety valve and the and the tank inlet, as well as blocking the discharge port of the safety valve.

- Do not leave a water heater filled with water without power and heating water in a room where the temperature may be below 0°C.
- In case of long absences, repair, technological and preventive work on the water supply line, it is necessary to close individual stop valves on the cold water supply line to the water heater and on the hot water outlet line, as well as to turn off the water heater and disconnect from the power supply by pulling the plug from the socket.
- If any part of the water heater is damaged, contact a service technician for repair. Use only replacement parts supplied by the manufacturer.
- This appliance is not intended for use by persons (including children) with reduced physical, sensory or mental capabilities, or lack of life experience or knowledge, unless they are supervised or instructed. Children should be supervised to ensure that they do not play with the appliance.

Destination

The electric storage water heater is designed for heating cold tap water. It is used exclusively The water from the water heater is not intended for drinking or cooking.
Installation and initial start-up of the heater must be carried out by a qualified technician, who can be held responsible for the correct installation and give recommendations on the use of the heater.
Wiring must comply with current standards and regulations.
Before installing the water heater, make sure the grounding electrode of the outlet is properly grounded. If the grounding electrode is missing. The water heater must be grounded by a separate grounding conductor to the ground terminal on the heater element flange fastener in the outlet. Do not install or operate the product if grounding is not available.

Complete set

The electric storage water heater is complete with the basic elements for installation and connection. The water heater set includes:

- water heater with power cord—1 pc;
- safety valve—1 pc;
- RCD with instructions for use—1 pc;
- fixing anchors for mounting.
  For 30L, 50L—2 pcs; for 80L, 100L—4 pcs;
- user manual—1 pc;
- warranty card (in the manual)—1 pc.

Device arrangement

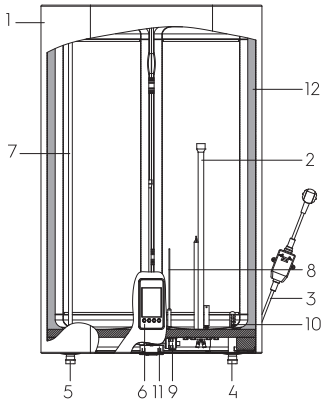

Fig. 2

1. Hull
2. Dry heating element housing
3. Power cord with RCD
4. Cold water inlet
5. Hot water output
6. Control Panel
7. Hot water supply pipe
8. Electronic anode
9. Safety thermostat
10. Cold water intake pipe into the tank (with diffuser)
11. A place for a speaker
12. Thermal insulation

Automatic water temperature control:
When you open the hot water tap on the mixer tap at the water heater outlet, cold water starts flowing in. The water in the tank mixes and its temperature decreases. The thermostat sensor reacts to the falling water temperature and the heating element (heating element) switches on automatically and heats the water up to the set temperature. When the temperature reaches the set point, the heating element is automatically switched off.

Levels of water heater protection:
- protection against overheating;
- protection against excessive hydraulic pressure.
- RCD (Ground Fault Interrupter).

The steel inner tanks with a special protective coating are made using the advanced electrostatic dry enameling method. Enamel properties:
- increased adhesive ability and high ductility (hardened at 850°C);
- expands or contracts with temperature changes in the same proportion as the walls of the inner tank, without creating micro-cracks that could lead to corrosion.

As additional protection against corrosion of the internal tank, the water heater is equipped with a magnesium anode and electronic titanium anode. The dry heating element (PHE) is placed in protective metal covers, which exclude direct contact of the heating elements with water, respectively, no scaling is formed on the heating elements, which increases their service life and prolongs their service life.

The water heater has three heating power modes:
- LOW (700 W)
- MID (1300 W)
- TURBO (2000 W).

Depending on the water temperature, the background image is displayed as follows:
- From 5 to 35°C—calm smooth water;
- From 36 to 55°C—agitated water;
- 56 to 75°C—boiling water, bubbles.

Depending on the water temperature, the heating indicator is displayed as follows:
- From 5 to 30°C—indication in blue;
- 31 to 50°C—orange display;
- 51 to 55°C—indication is green;
- 56 to 75°C—indication in red.

Control Panel

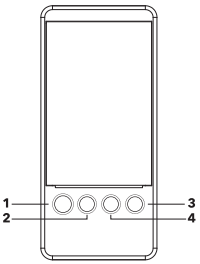

Fig. 3

1. **On/off/back button.**
   On/off button to turn the unit on/off. Button to return to the previous menu section.

2. **Menu, OK.**
   Menu entry button, selection confirmation button.

3. **Menu navigation button: up, left.**

4. **Menu navigation button: down, right.**

Information indicators on the display

	Locking Display Buttons
	Unlocking Display Buttons
14:45	Display the current time
	Wi-Fi connection
	Display electric anode
MID Power	Display current heating power
54 °C Target temperature	Displaying target temperature values
52 °C	Display current temperature value
Timer is on	Activate Timer function
BS	Activate Bacteria Stop function
NF	Turning on No Frost function
STANDBY	Turning on standby mode
SMART	Switch on Smart function
HEATING UP	Heating progress display

Turning on the device
Press and hold button 1, the display will alternately show the Electrolux logo and the name of the device when the device is switched on. If this is the first time you have switched on the heater, you will first be prompted to select the interface language and then set the current date and time. When the initial setup is complete, the device will go into Stand by mode.

Standby mode (standby mode)
The heater does not heat water in this mode. The temperature in the tank and the current time are displayed.

Changing the display orientation
Since a horizontal If the unit is mounted vertically or horizontally, the orientation of the display can also be changed horizontally and vertically accordingly. To change the orientation, press buttons 1 and 2 simultaneously for a few seconds.

Icon color indication

- The element is grayed out and/or crossed out. This function is disabled and not selected:



- Element and caption in white. This section is not selected:



- The item and the caption are in blue. This feature is enabled and not selected:



- The item is white on a blue background and the caption is blue. This function is selected:



Control interlock
To lock the control panel, press buttons 3 and 4 simultaneously, the screen will display the Locked icon.
To unlock the control panel, press buttons 3 and 4 as well, the screen will not show the Unlocked icon.

Heating temperature setting
Use buttons 3 and 4 to set the target heating temperature. Button 3 to decrease the value, button 4 to increase the temperature value. The available range is from 30 to 75˚C.

No Frost—Anti-freeze function
This function keeps the tank temperature below 5° C to prevent the tank from freezing. This function is enabled by default.

Bacteria Stop
The professional antibacterial heat treatment function of the water stops the proliferation of bacteria, such as ligionella, which grow when the device is not used for a long time. The water in the appliance is heated to a temperature of 70˚C and maintained at this temperature for 20 minutes. This function will be triggered if the temperature in the tank has not risen above 70˚C for a week.

Timer
There are 3 timers available for setting in the device. They can be activated, deactivated and changed. By default, these timers are off. To change Timer 1, select it and press button 2, you will go to the settings of this timer. The time for which the hot water is needed and the timer repeat, as well as the switching on and off of Timer 1, are available for setting. Changing the settings of Timers 2 and 3 is done in the same way.
By default, all three timers have the same settings:
- the time by which the water must be heated—17:00;
- repetition—once;
- timer off.

Smart function
When Smart is active, the water heater remembers your settings for 7 days and then repeats them for the next 7 days. The device remembers
The function allows you to prepare the water at the desired temperature only when you need it, thereby saving energy costs. The function allows you to prepare water at the desired temperature only when you need it, thereby saving energy costs. The rest of the time the temperature in the tank is maintained at 40°C.

Display brightness
Display backlight brightness control: 50 or 100%.

Auto Display Off—Display Timeout
Set the display timeout. When this function is activated, there are three selectable values: 15, 30 and 60 seconds. The default setting is 30 seconds.

Date and time
This section allows you to set the current date and time of the device.
The correct time and date are necessary for the Timer and Smart functions to work properly.

Language
The interface language setting is available in English.

Diagram of the SI EEC settings menu

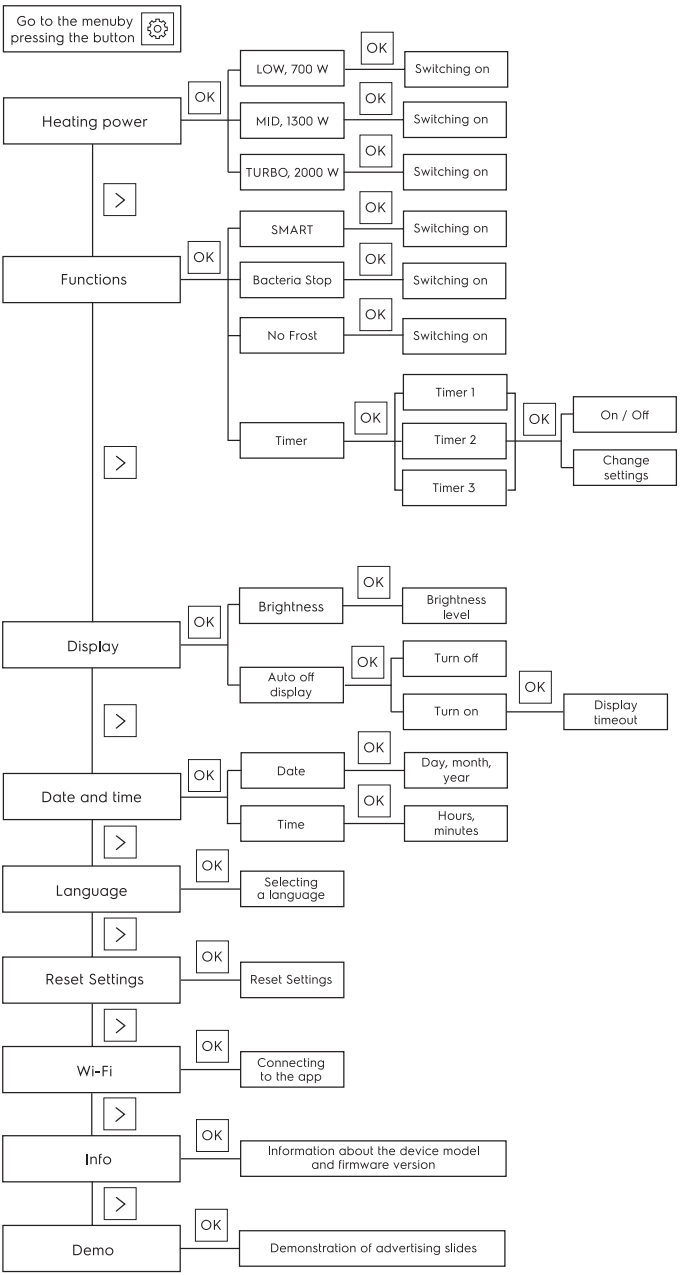

Water heater installation

Make sure that the electric water heater is installed using original parts provided by the manufacturer, which can support the weight of the water heater filled with water. Do not mount the water heater on the bracket until do not make sure that the attachment is securely fastened. Otherwise, the electric water heater could fall
The following table describes the labels in this manual and the corresponding labels in this manual.
When selecting locations for mounting bolt holes, make sure that both sides of the bathroom walls
or other room up to the water heater body there is a clearance of at least
0.2 m and at least 0.5 m on the pipe connection side to facilitate access for maintenance when necessary.
If the water heater is supplied directly from wells, wells or water towers, a coarse filter for the cold water entering the water heater must be used to operate the water heater. The coarse filter can be purchased from specialty stores. If the coarse filter is not installed, the product warranty is not valid. The electric water heater must be installed on a solid vertical surface (wall). The installation of SI EEC series water heaters is greatly facilitated by the possibility to install them both vertically and horizontally anywhere in your home, in a heated (!) room. It is advisable to install the heater as close as possible to where the hot water is used, because the shorter the length of the pipes, the less heat is lost. As shown in Fig. If the heater is installed horizontally, the supply pipes should be on the right-hand side. When installing the heater close to a wall, leave the recommended clearance for maintenance. Do not install the heater on a horizontal surface and up against the floor. After selecting the mounting location, locate the two fastening bolts with hooks (depending on the specifications of the selected product). Make two holes in the wall to the required depth corresponding to the size of the mounting bolts, insert the screws, rotate the hook upwards, tighten the nuts firmly and then install the electric water heater on it (see Fig. 4). If the bathroom is too small to accommodate the water heater, it can be installed in any other room, protected from direct sunlight and rain.

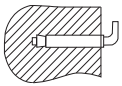

Fig. 4. Mounting anchor for mounting.

Connecting to the water supply

To connect the water heater to the water mains use pipes with a diameter of G1/2.

Warning!
It is not recommended to use any additional materials for the installation of the flexible hose and the safety valve that are not included in the water heater. The coupling nut of the flexible hose has a rubber gasket that ensures a tight connection between the hose and the safety valve. When tightening, avoid sudden jerking forces and limit the tightening torque to 25-30 N*m.

Install complete rubber gaskets on the ends of the threaded connections to prevent leaks when connecting the piping.
If you want to implement a water supply system for several water points, use the connection method (see Fig. 5).

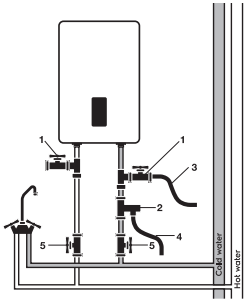

Fig. 5

1. Tees
2. Relief valve
3. Drain tube
4. Drain hose
5. Valves

Warning!
If the appliance is installed horizontally, the water supply pipes must be on the left, placement of the supply pipes on the right is not allowed!

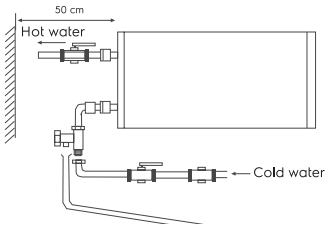

Fig. 6

Connecting to the power grid

All storage water heaters of the SI EEC series are designed to connect to an electrical network with a single-phase voltage of 230 V. Before connecting, make sure that the power supply at the place of connection complies with the specifications on the rating plate of the appliance. Observe the applicable electrical safety regulations when installing the heater. When installing the water heater in the bathroom or toilet, take into account the restrictions related to the existence of prohibited and protective volumes (spaces).

Prohibited volume is the space limited by the tangential and vertical planes in relation to the outer edges of the bathtub, toilet or shower unit and the plane above them, or above the floor if the plumbing is mounted on the floor, at a height of 2.25 m.

A protective volume is a space whose enclosing horizontal planes coincide with the planes of the forbidden volume, and whose vertical planes are 1 meter from the corresponding planes of the forbidden volume.

Calculated data for copper
Selection of cable (wire) cross-section by power and length in copper, U = 230 V, one phase

R, kW	1	2	3	3,5	4	6	8
I, A	4,5	9,1	13,6	15,9	18,2	27,3	36,4
Cross-section of current-carrying core, mm²	1	1	1,5	2,5	2,5	4	6
Maximum permissible cable length at specified cross-section, m	34,6	17,3	17,3	24,7	21,6	23	27

Operation

Filling with water
In order to fill the tank completely with water, it is necessary:
- open the hot water tap on the faucet;
- open the water supply valve to the water heater;
- wait for the water to come out of the faucet;
- close the hot water tap on the faucet and make sure there are no leaks.

If water flows from the hot water tap—the tank is full of water. Only then can the tank be connected to the power grid.
In the case of uncertainty as to whether there is water in the water heater, do not connect it to the mains.

Connecting to the power grid

Watch out!
Connect to the mains only after filling with water (the opposite may cause burning of the heating element and damage to the device).

Plug the water heater into an outlet, then the display on the panel lights up control. This indicates that the water heater is switched on and is supplied with power. Set the desired water heating level from low to high using the heating temperature control. The water heating temperature will be shown on the display as it heats up. Heating water is switched off automatically when the set temperature is reached and is switched on to reheat automatically. When the water temperature reaches the set temperature, the heating will stop.

Installation dimensions and dimensions

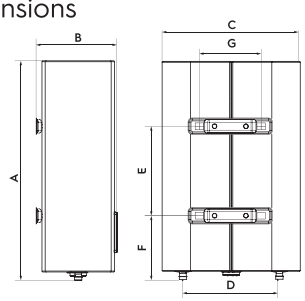

Fig. 7

Options/ Model	EWH 30 SI EEC/ EWH 30 SI BE EEC/ EWH 30 SI SE EEC	EWH 50 SI EEC/ EWH 50 SI BE EEC/ EWH 50 SI SE EEC	EWH 80 SI EEC/ EWH 80 SI BE EEC/ EWH 80 SI SE EEC	EWH 100 SI EEC/ EWH 100 SI BE EEC/ EWH 100 SI SE EEC
A, mm	635	970	920	1135
B, mm	250	250	333	333
C, mm	435	435	555	555
D, mm	360	360	430	430
E, mm	280	550	430	600
F, mm	201	201	267	267
G, mm	197	197	197	197

Specifications

Options/Model	EWH 30 SI EEC/ EWH 30 SI BE EEC/ EWH 30 SI SE EEC	EWH 50 SI EEC/ EWH 50 SI BE EEC/ EWH 50 SI SE EEC	EWH 80 SI EEC/ EWH 80 SI BE EEC/ EWH 80 SI SE EEC	EWH 100 SI EEC/ EWH 100 SI BE EEC/ EWH 100 SI SE EEC
Nominal (usable) volume, l	25	41	65	81
Rated power, W	700/1300/2000			
Nominal voltage, V~Hz	230~50			
Rated current, A	8,7			
Minimum water pressure, bar	80 000 (0,8)			
Maximum water pressure, bar*	600 000 (6)			
Maximum water temperature, °C	75			
Heating time from 10 to 75 °C**, min.	99	162	256	316
Protection against electric shock	I			
Moisture protection	IPX4			
Energy efficiency class***	A	B	B	C
Device dimensions (W×H×D), mm	435×635×260	435×970×260	555×920×350	555×1135×350
Package dimensions (W×H×D), mm	680×485×280	1010×485×280	970×605×362	1185×605×362
Net weight, kg	15,3	22,6	29,0	33,5
Gross weight, kg	17,0	25,0	32,6	37,0

* At the maximum pressure, the excess pressure is released through the pressure relief valve. If the water mains pressure exceeds 6 bar (nominal working pressure), a pressure reducing valve must be installed.
** Heating times are given at full heating power and are based on ideal ambient conditions.
*** Energy efficiency calculated for vertical installation.
The manufacturer reserves the right to make changes.

RCD (Ground Fault Interrupter)

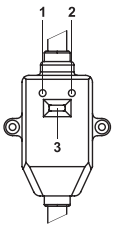

Fig. 8

- 100% prevention of electric shock.
- Follow the installation instructions when connecting the electric water heater household battery heater.
- The Power indicator (1) will light up if the RCD is not activated.
- Press the TEST button (2) to test the RCD.
  Power indicator (1) will be disabled.
- Press button (3) to reset the RCD.

Troubleshooting

Refusals	Reasons	Fixing
No water coming out of the hot water tap	1. The water supply is cut off. 2. The water pressure is too low. 3. The water-wire inlet valve is blocked.	1. Wait for the water supply to resume. 2. Use the water heater when the water pressure increases again. 3. Open the water inlet tap.
Temperature, of hot water supplied exceeds the permissible level of 75 °C	Temperature control system failure (red indicator stays on)	1. The water heater must be immediately disconnected from the mains. 2. Contact a service technician for repairs.
Error E1 is displayed on the display	No water in the tank	1. Wait for the water supply to resume. 2. Open the water inlet tap.
Error E2 appears on the display	1. The thermostat is damaged. 2. The heating element is damaged. 3. Faulty electronic board.	Contact a service technician

Care and maintenance

⚠

Warning!
Always disconnect the water heater from the power supply before servicing.

The heater does not require additional maintenance. It is necessary to wipe the body from time to time with a soft cloth or a damp sponge in order not to damage the heater body. Do not use harsh chemicals.

Active anode
SI EEC series water heaters are equipped with an active (electronic) anode. Anode is a titanium rod and provides corrosion protection whenever the water heater is connected to the mains. If error E6 or E7 appears on the display, the electronic anode is not functioning and the water heater is not protected against corrosion. Contact a service center to solve the problem.

Heating element (TEH)
Tubular electric heater (TEH) is designed to heat water in the inner tank by converting electrical energy into heat. The formation of limescale (scale) on its surface can lead to poor heat transfer, overheating and premature failure of the heating element. Regularly inspect and, if necessary, descale its surface with a descaling agent. The heating element warranty is void if one or more of the following conditions are met:

- the hardness of the water exceeds 25 °F,
- the thickness of the scale layer on the surface of the heating element is more than 5 mm.

⚠

Watch out!
Scale build-up on the heating element and sludge in the internal tank can lead to water heater failure and is grounds for refusal of warranty service. Regular maintenance is a preventive measure and is not covered by the warranty.

The pressure relief device should be checked for operation at regular intervals to remove lime deposits. It is not allowed to install switches, outlets, and sockets in the forbidden space and lighting fixtures. Circuit breakers are not permitted in the safety space, but grounded sockets may be installed.

The water heater should be installed outside the prohibited volume so that it is not exposed to jets of water. A properly rated circuit breaker should be installed to ensure safe operation of the water heater. For daily use, it is advisable to keep the water heater plugged in, as the thermostat only turns the heat on when it is required to maintain the set temperature. Have your water heater serviced regularly by an authorized service center.

⚠

Never remove the water heater cover without first disconnecting it from the power supply.

Transport and storage

Water heaters in the manufacturer's packaging can be transported by all types of covered transport in compliance with the rules for the transportation of goods applicable for this type of transport. Transportation conditions are at temperature from minus 50 to plus 50°C and at relative humidity of up to 80% at plus 25°C. During transportation, any possible impact and movement of packaged water heaters inside the vehicle should be excluded. Transportation and stacking should be done in accordance with the handling signs indicated on the packaging. Water heaters have to be stored in the manufacturer's packaging under storage conditions from +1°C to +40°C and relative humidity up to 80% at 25°C).

Recycling



The time-expired appliance can't be disposed with household waste (2012/19/EU).

Warranty

Warranty service is performed according to the terms specified in the "Warranty" section.

Warranty:

- Warranty period for the item is two years from the purchase date. If any defects occur due to defects in materials and/or workmanship during this two-year warranty period, the item should be repaired or replaced.
- Free maintenance or replacement is possible only in case if convincing evidence is provided, for example a stub, which confirms that the day when the service is requested, is within the warranty period.
- The warranty does not cover products and/or parts of the product that are subjects to deterioration, may be considered as expendable supplies or which are made of glass.
- The warranty is void if the defect is caused by damage ensuing by misuse, poor maintenance (for example, a failure occurred due to ingress of foreign objects or liquids) or if changes or repairs were performed by persons not authorized by the Manufacturer.
- For the correct use of the product, the user must strictly follow all included in the manual instructions, and also must avoid any action or manipulation described as unwanted or indicated so in this manual.
- These warranty restrictions do not affect your statutory rights.

Support:

The support during and after the warranty period is available in all countries where the product is officially distributed. Please contact your dealer for help.

Date of manufacture

The date of manufacture is indicated on a sticker on the body of the appliance, and also encrypted in Code-128. The date of manufacture is determined as follows:

SN XXXXXXX XXXX XXXXXX XXXXX

month and year of production

Do not remove and keep safe the serial number on the device's body. If the serial number sticker is lost or damaged, it will not be possible to restore the production date if necessary.

Importer:

Manufacturer: CladSwiss AG,
Bahnhofstrasse 27, 6300 Zug, Switzerland.
E-mail: info@cladswiss.com

Made in PRC.

Electrolux is a registered trademark used under license from AB Electrolux (publ.).

The manufacturer reserves the right to modify the design and characteristics of the device.

This manual may contain technical and typing errors. Changes to technical characteristics and assortment are subject to change without notice.

Mistakes and typing errors may be permitted in texts and numeric notations.
Product design and technical data may vary from the one pictured on the packaging.
Please refer to a sales consultant for more detailed information.