SUNWODA ENERGY

User Manual

MonaWall 5

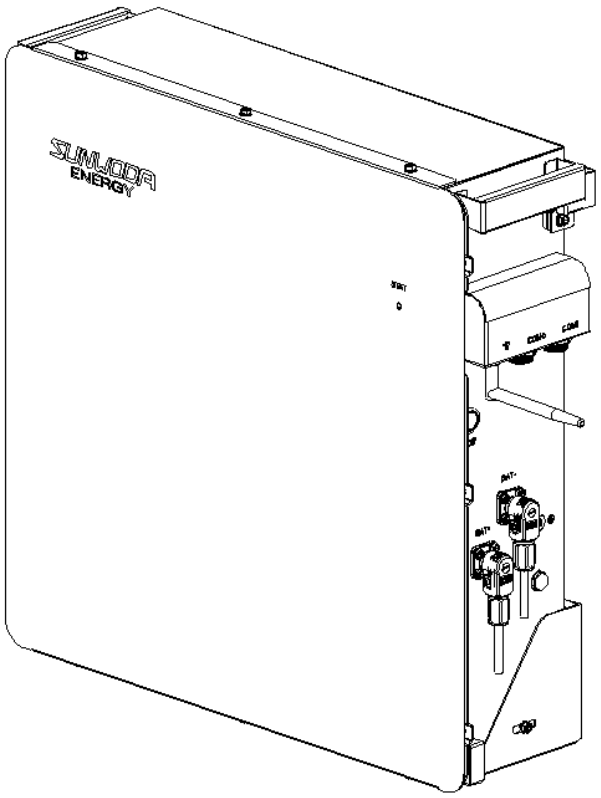

Version：V1.0

Content

1 Safety precaution 5
1.1 Storage and installation environment 5
1.2 Battery safety guidelines 5
1.3 Warning signs and stickers 5
1.4 Emergency handling 6
2 Product Description 7
2.1 Product Introduction 7
2.2 Product appearance description 8
3 Installation Guide 10
3.1 Installation site requirements 10
3.1.1 Environmental requirements 10
3.1.2 Physical installation requirements 11
3.1.2 Preparation of installation tools 12
3.1.3 Preparation of installation tools 12
3.1.4 Unboxing guide 13
3.2 Installation steps 13
3.2.1 Installation step 13
4 Electrical connection 18
4.1 Grounding 18
4.1.1 Guide of electrical connection 19
4.1.2In parallel electrical connection guide 21
5 System commissioning 22
5.1 System power on 22
5.2 System power off 22
5.3 System configuration 23
6 Maintenance and troubleshooting 27
6.1 Routine maintenance 27
6.2 Panel LED lights 28
6.3 Fault checklist 28
7 Warehouse storage guidelines 29
7.1 Packaging guidelines 29
7.2 Storage 30
8 Dispose of used batteries 30
9 Detailed parameter 31

1 Safety precaution

Read the manual carefully and operate in accordance with the safety precautions. Refer to local safety regulations on items not covered in this manual. Electrical installation, maintenance must be performed by professional / qualified personnel.

1.1 Storage and installation environment

- Handle the product gently, prevent from dropping
- Avoid open flame; keep away from flammables, explosives or corrosive chemicals
- Choose cool and dry place for storage and installation
- Prevent from water or humid intrusion
- Prevent from accidental access (children and animals)
- Do not step on the product packaging
- Do not place any foreign objects on top of the battery pack
- Do not store the battery pack upside down

1.2 Battery safety guidelines

- Prevent from electrostatic discharge
- Wear insulating gloves when handling batteries.
- Do not energize auxiliary power during installation
- Check the polarity carefully before switching on the system
- Defected or damaged batteries shall not be charged or discharged

Use the product only with inverters authorized by Sunwoda Energy, or consult Sunwoda Energy's product engineers. For compatible list inverters, please visit:

https://www.sunwodaenergy.com/download.

1.3 Warning signs and stickers

	Warning generic hazard		DO not mix with domestic
	Warning High Voltage - Electrical shock hazard		Please recycle
	No flame		This side up
	No stepping on		User manual

	Warning High temperature		Protective Earth (connector)
	Warning High Voltage Wait 5 min till fully discharged		Protective Earth (general identification)
	Do not short circuit (cut off power)		Keep away from children
	Fragile		Do not get wet

1.4 Emergency handling

Wear personal protective equipment (PPE) such as goggle, facemask, insulated gloves and boots. Evaluate the situation before taking remedy action. When it is safe to do so, disconnect external AC or DC power connection.

Damaged or deformed battery enclosure
Risk of chemical leakage (i.e. electrolyte) and internal short-circuit.

 Warning

Deformed or severely damaged battery pack can lead to piercing of cell pouch (chemical leakage) or internal short-circuit (thermal runaway). The damaged battery pack can release toxic gas. Keep away from it.
In case of accidental skin contact, wash the skin thoroughly with soap and seek medical advice. For eye contact, wash under running water (~15 minutes) and require immediate medical attention.

Fire hazard
If the fire is not from the battery or not spread to the battery, use FM-200 or CO_2 fire extinguisher to put out the fire.
If the battery pack catches fire, do not attempt to put out the fire and evacuate immediately.
Seek medical in case of inhalation of pungent and toxic fumes.

Keep damaged batteries isolated and call your local fire department. Contact service for further support.

Note：
1. If a fire occurs during battery charging, disconnect the battery pack circuit breaker and cut off the power supply for charging under safe conditions.
2. If the battery string does not catch fire, extinguish the fire before the battery string catches fire.
3. If the battery pack catches fire, do not attempt to extinguish the fire. Evacuate immediately

Water damage

Risk of electric shock and internal short-circuit. In case of splash or water spillage, when it is safe to do so, dry the product. If any part of the battery system is submerged, keep away from water. Do not reuse the submerged battery. Contact a service for support.

2 Product Description

This document mainly introduces the product, installation, commissioning, maintenance, troubleshooting, packaging, and transportation of the MonaWall 5 energy storage system.

2.1 Product Introduction

- This product is a lithium battery energy storage system based on the chemical composition of Lithium Iron Phosphate (LFP), and adopts a module parallel design.
- MonaWall 5 is designed to collect data using WIFI and is capable of supporting remote real-time monitoring and firmware upgrades.
- The battery energy storage system can be used with the inverter, and the communication adopts CAN .
- The system supports up to 4 single systems connected in parallel, which can be expanded to 20kWh.
- The system adopts IP65 protection design to support outdoor use.

System Diagram

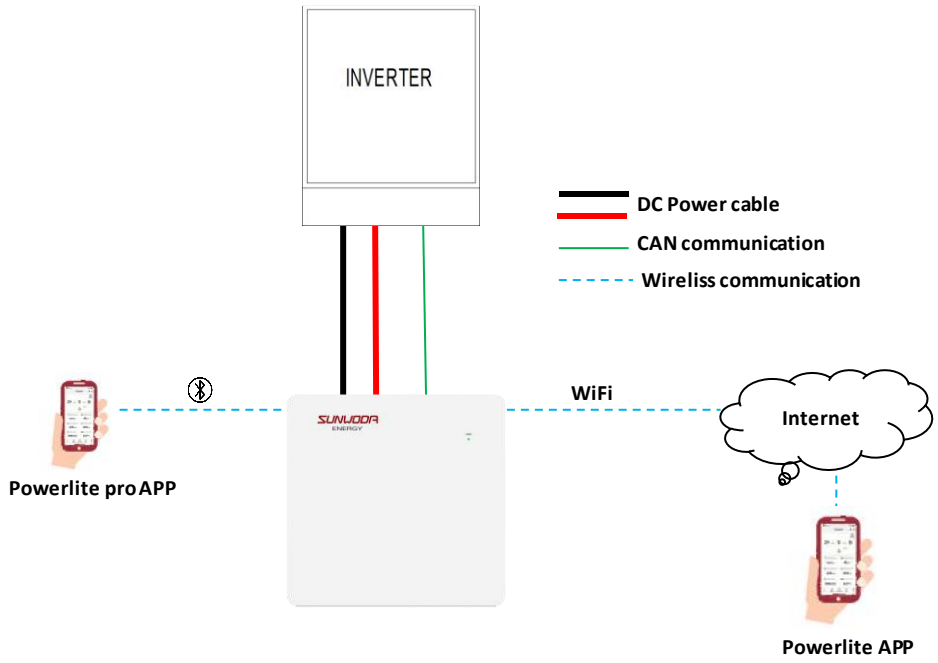

Note: The inverter used must be in the Sunwoda Energy Authorized Matching Inverter List.

2.2 Product appearance description

Product size chart:

The battery module size diagram and effect diagram are shown in the following figure:

Size: W*D*H=544*533*147 mm

Weight: 53kg

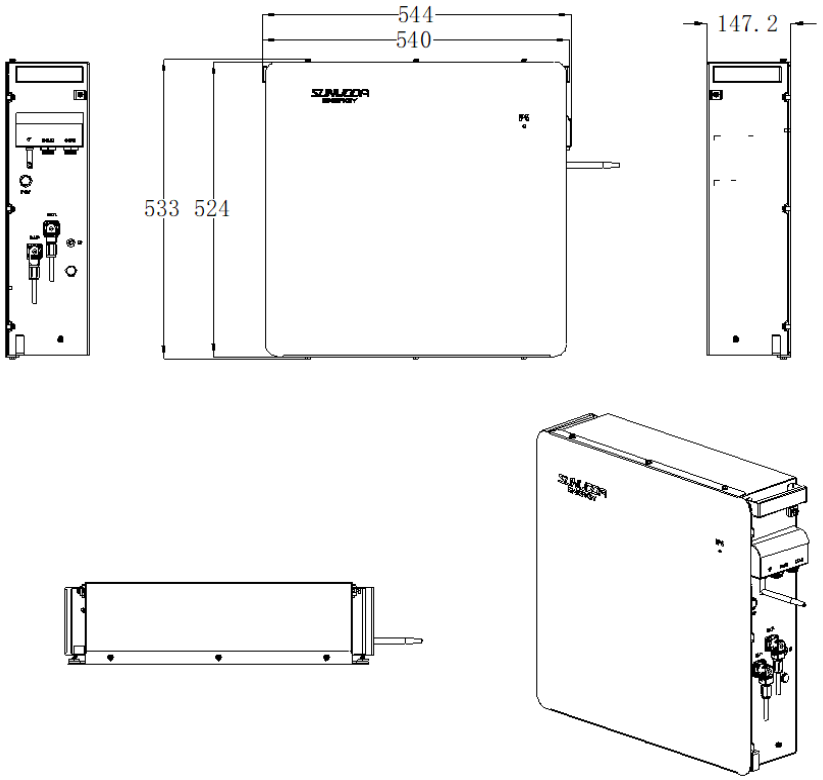

Figure 1.2-1 Dimensions of module

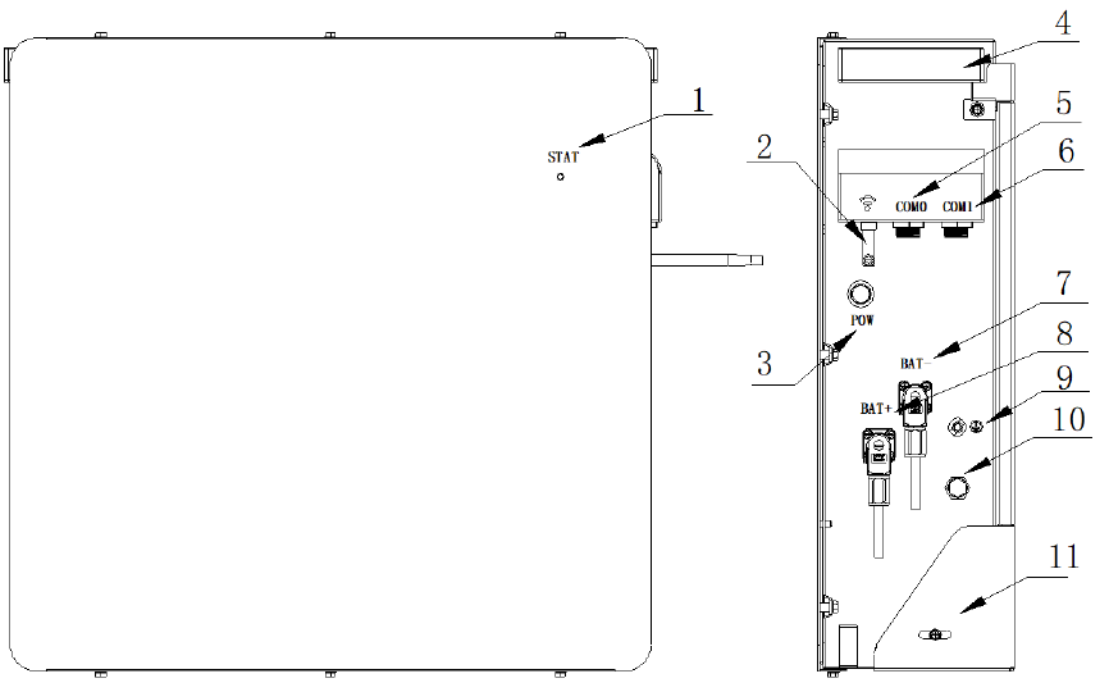



Figure 1.2-2 battery module diagram

Product Front Panel Definition：

NO	Item	Function	Note
1	STAT	Indicator (operating, fault LED)	
2	WIFI	Antenna	
3	POWER	One-key power-on interface	

4	Handle	handle	
5	COM0	Communication interface with PCS	CAN
6	COM1	Automatic addressing and internal CAN communication interface	
7	BAT-	Battery output negative interface	
8	BAT+	Battery output positive connector	
9	PE	Battery module grounding hole	
10	Safety valve	Pressure relief valve	
11	Wall bracket	Wall bracket	

3 Installation Guide

3.1 Installation site requirements

3.1.1 Environmental requirements

a. Ambient temperature: -10℃～+50℃ (recommended: 10℃～35℃ or 50℉～95℉).

b. Ambient humidity: 10-90%.

c. Altitude < 4000 meters.

d. For indoor installation

- Avoid direct sunlight
- Avoid rain and snow
- Avoid flood-prone locations
- Install under shed if possible
- 3 feet of clearance from doors, windows, driveways, or other batteries
- Keep away from heating equipment.
- Protection against corrosive chemicals
- Prevent water from spilling

e. Consider locations with ventilation fans, smoke, heat or combustible gas detectors.



Warning!

Use of MonaWall 5 outside of the temperature range may cause irreversible damage to it

Note: If MonaWall 5 is used below 10 degrees or above 40 degrees, the charging and discharging current of MonaWall 5 may decrease.

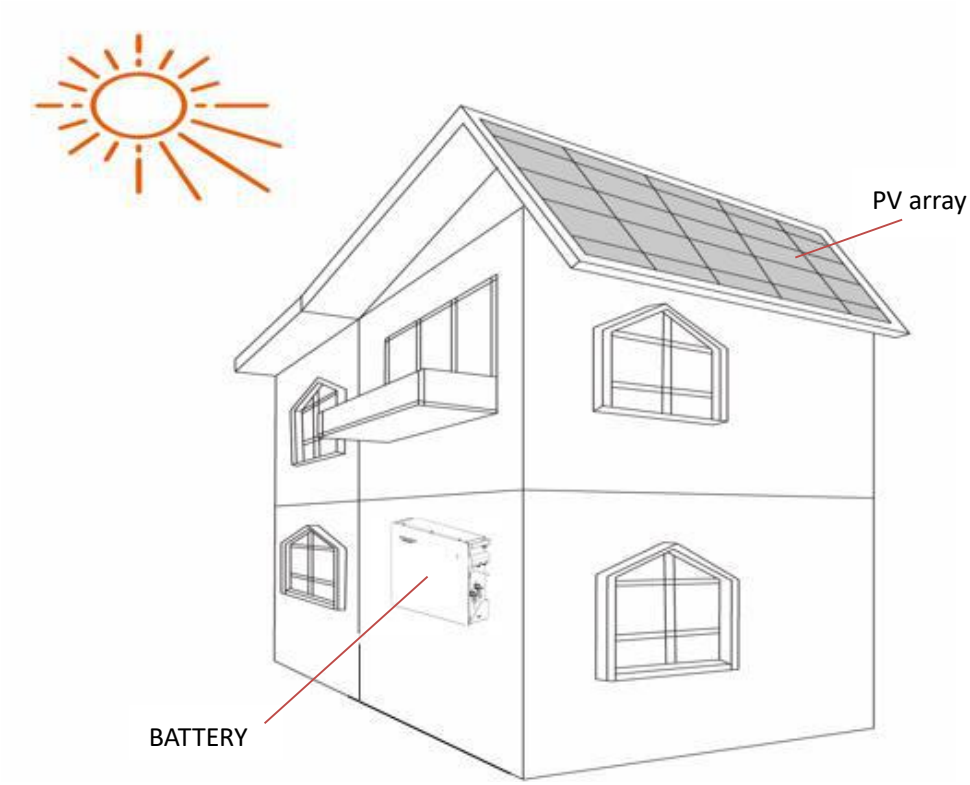

3.1.2 Physical installation requirements

This simple bracket is optional. Assuming that the client has a cabinet or bracket designed to meet the standard 19inch and 3U height installation, it is not necessary to choose this suggestion and ignore the following installation methods.

a. Product installation dimensions

MonaWall 5：

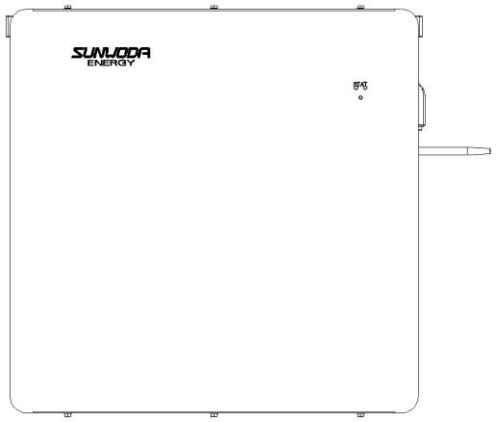

MonaWall 5 X 2：

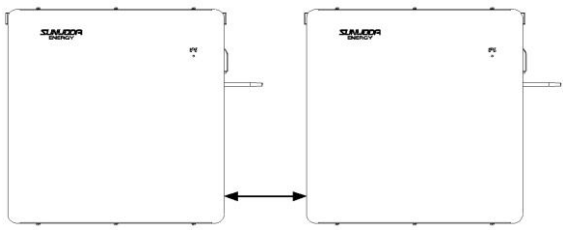

Interval:600mm

MonaWall 5 X 3：

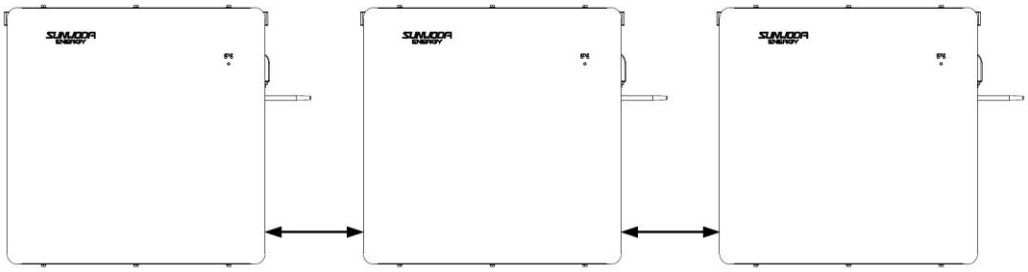

Interval:600mm

MonaWall 5 X 4：

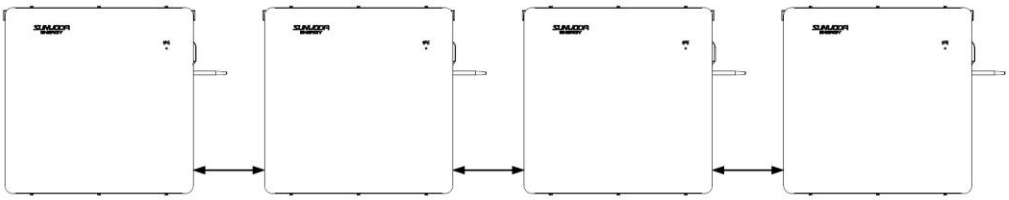

Interval:600mm

b. Weight





⚠53kg

For 2 persons

3.1.3 Preparation of installation tools

Tools



Electric screwdriver



Wrench



Percussion drill

Personal Protective Equipment



Safety gloves



Safety shoes

3.1.4 Unboxing guide

Unpacking checklist

Components



Battery



2Racks

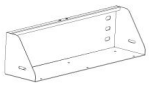

Wall mount bracket



1Racks



M5*10screw X 8



Expansion screw M6*60 (concrete wall) X 6



Self-tapping nails M6*60 (wooden exterior wall) X 6



M6*12*2 large flat pad X 6



M8 flange nut X6(Use with expansion screws)



PCS-CAN communication cable X1



Positive wire harness X1



Negative wire harness X1

3.2 Installation steps

3.2.1 Installation step

Step 1

Wall mount bracket assembly, remove the 1 wall-mounted base with the 1 back bracket, as follow:

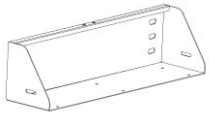



1 wall-mounted base &1 back bracket

Step 2

The back bracket stands upright with the screw holes of the wall base, and twist two M5X10mm Phillips screws with a Phillips torx screwdriver.

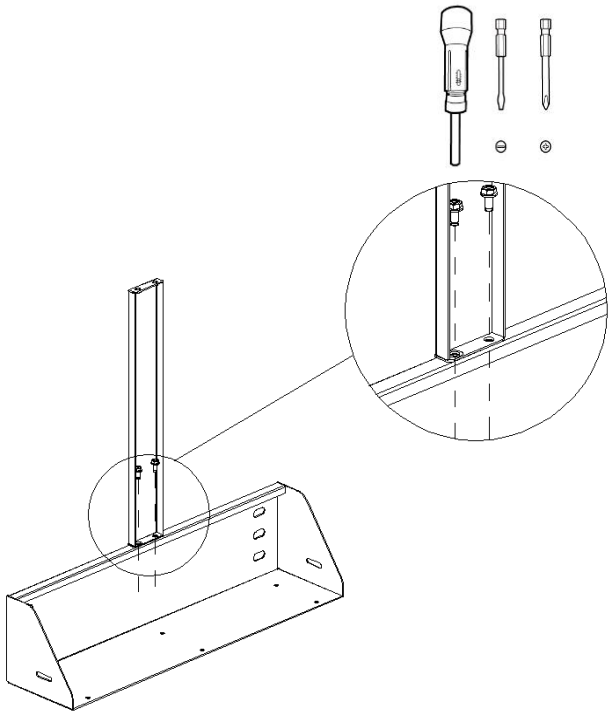

TORQUE 3.5 N▪M

Step 3

Back bracket 2 installation

a. Place the battery box with the base and back bracket 1 on the horizontal ground.

b. Then install the back bracket 2, and use a Phillips torx screwdriver to screw two M5X10mm Phillips combination screws.

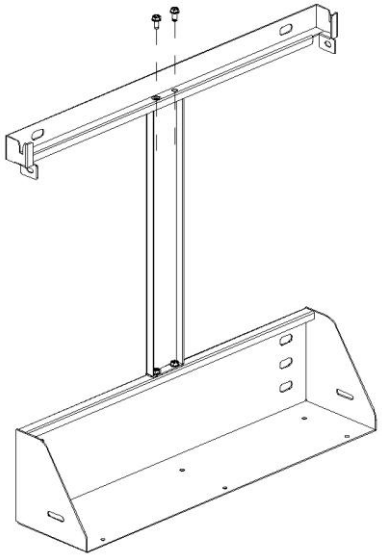

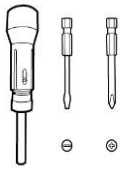

TORQUE 3.5 N▪M

Step 4

The wall-mount bracket is first installed to the wall to fix.

Measure the horizontal and vertical angles first, and do not appear inclined planes.

Concrete walls

a. When punching, use the wall bracket positioning, mark with a marker.

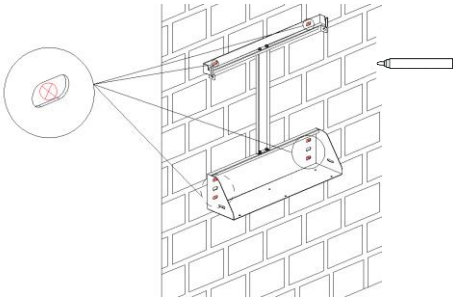

b. Remove the bracket and drill with an impact drill bit and a Φ10 drill bit to a drilling depth of approximately 80mm.

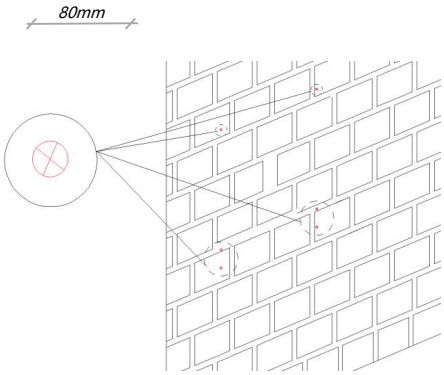

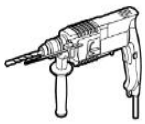

c. Put the bracket back in place, correct the fixing point hole, then knock the M8*80 expansion bolt into the drilled hole, and fix the bracket with the wall with the M8 flange nut.

Wooden walls

a. When punching, use the wall bracket positioning, mark with a marker.

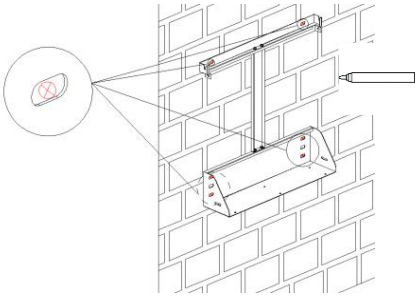

b. Remove the bracket, first use the electric batch and Φ5mm drill bit to drill out the hole position 5mm-10mm depth as a fixed point.

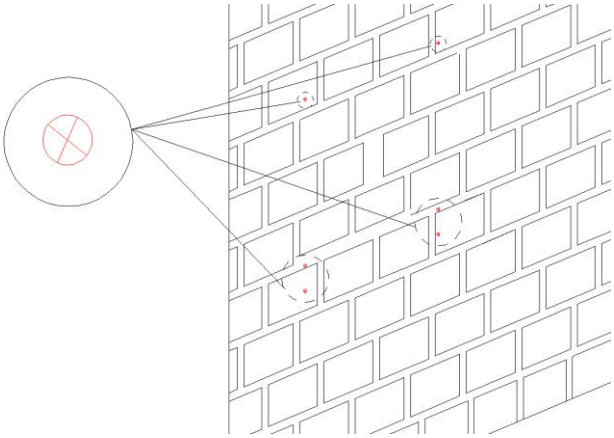



c. Put the bracket back in place, correct the fixed point hole, and then use the electric batch to drill the M6*60 self-tapping screw into the wooden wall in turn to the good hole position and fix it.

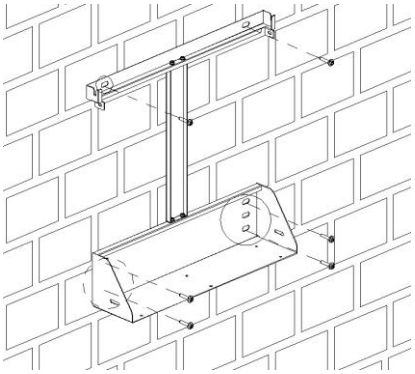

Torque spanner

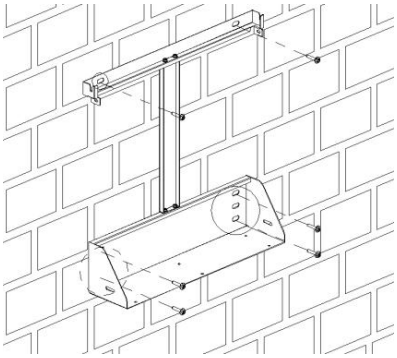







X 6

d. After the bracket installation is completed, 2 installers are required to lift and install the battery pack to the card slot of the back bracket as shown in the figure, and then push the entire battery box into the base.

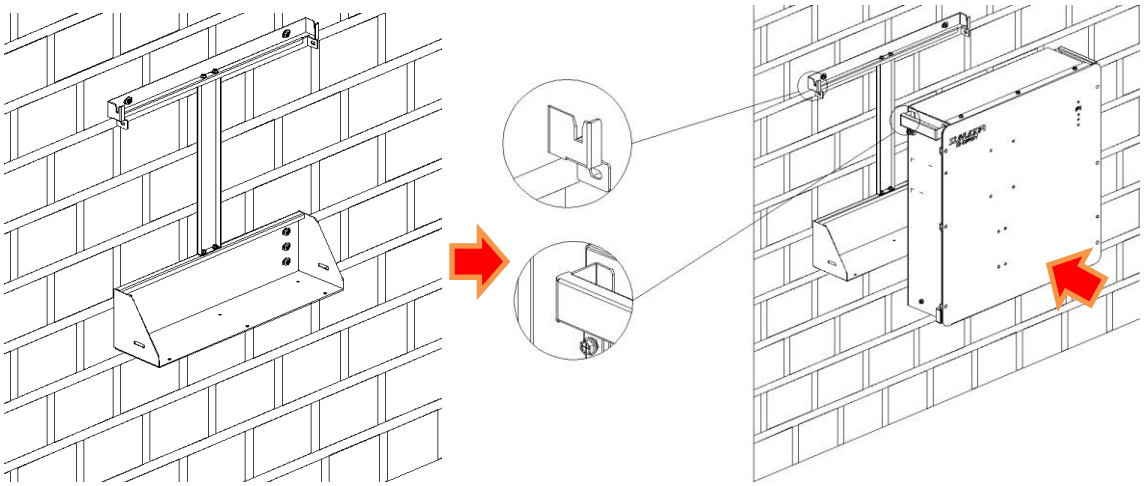

e. Then the M5X10 screw locks the battery pack and bracket.

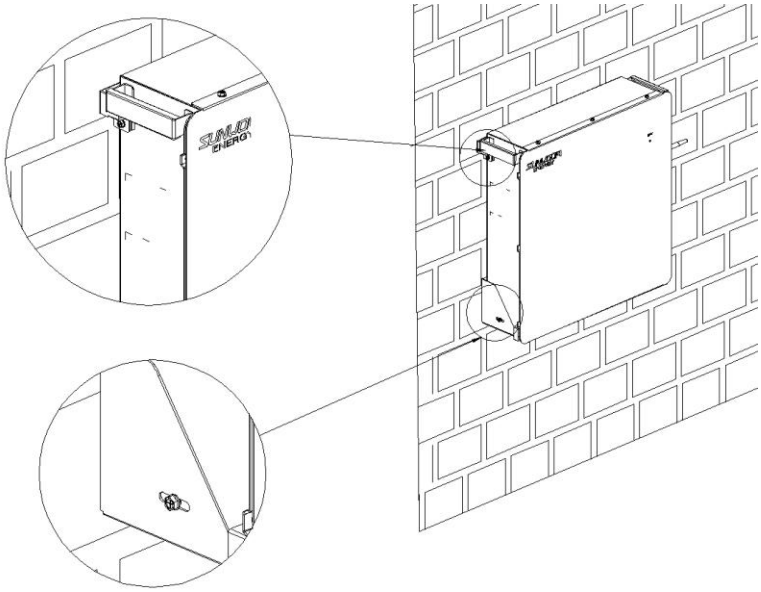

f. Complete the installation

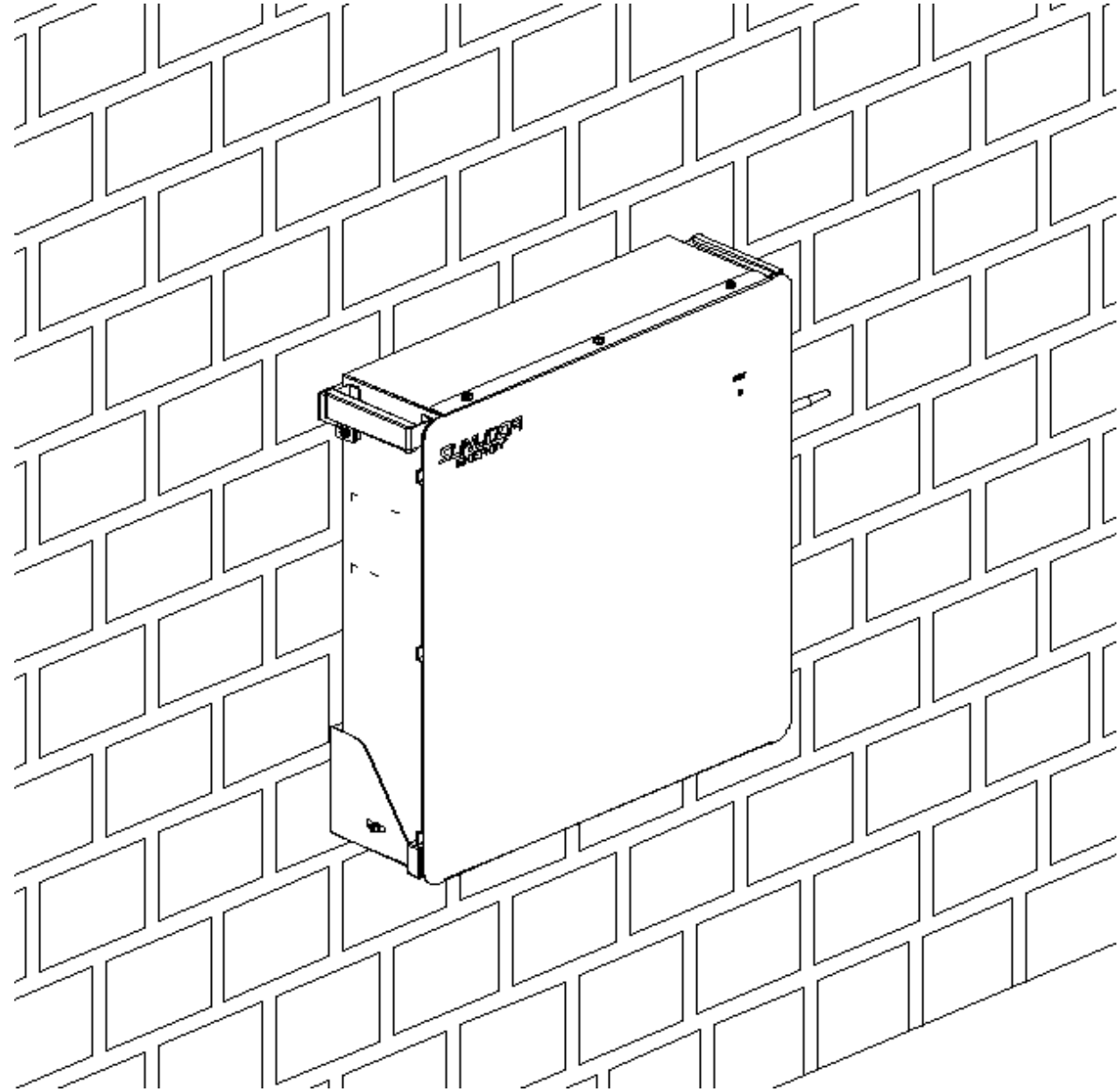

4 Electrical connection

4.1 Grounding

Grounding point Introduce the product ground point to the nearby ground point

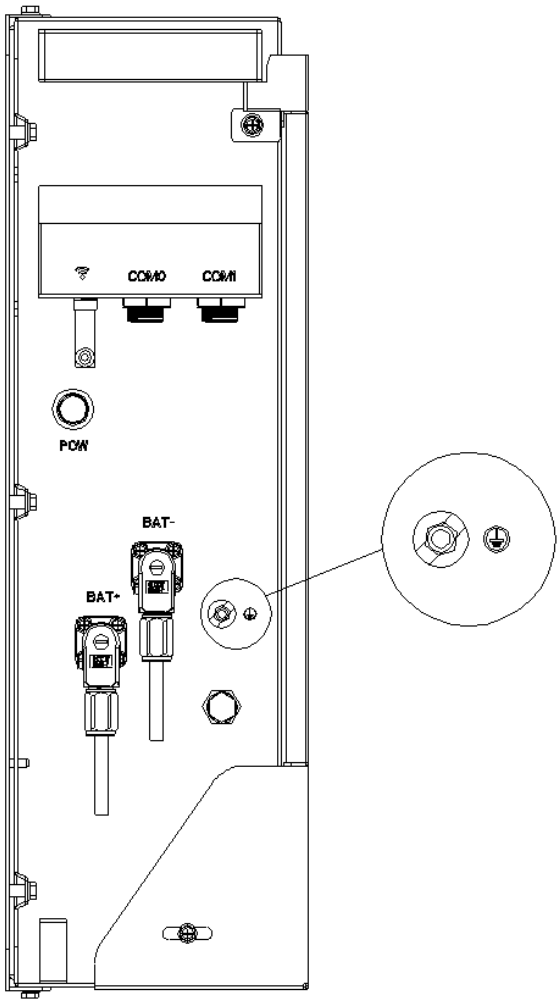

4.1.1 Guide of electrical connection

Electrical connection for single module shown as follows, PCS: 51.2V input

Note: Turn off the power before wiring to ensure safe operation.

Schematic diagram of power wiring

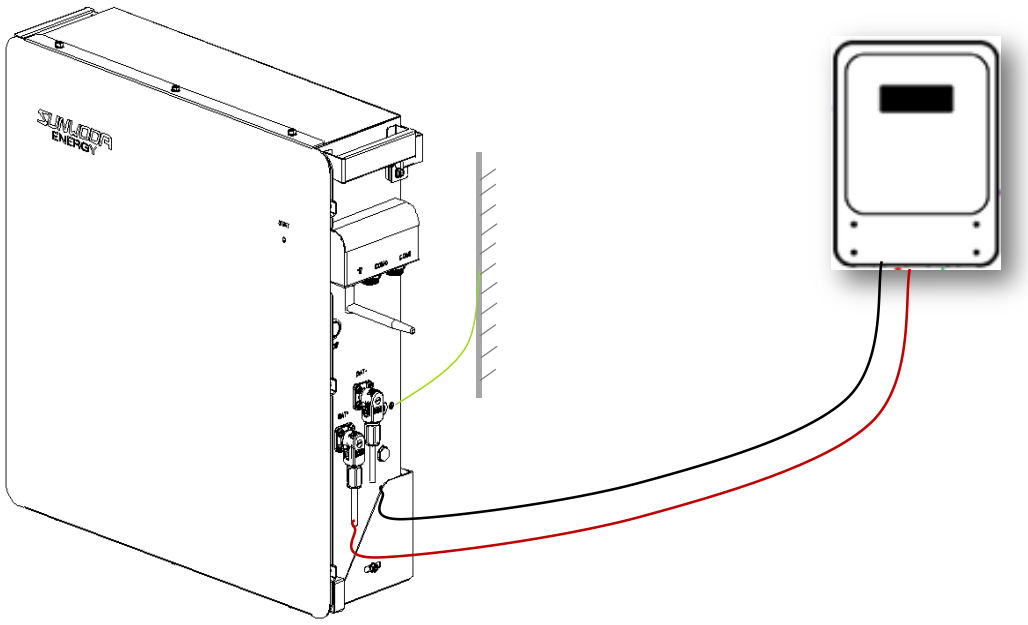

Connector installation instructions

The power cable connection is shown in the figure, press and hold the red unlock button, and there is a clicking sound for the plug connection.

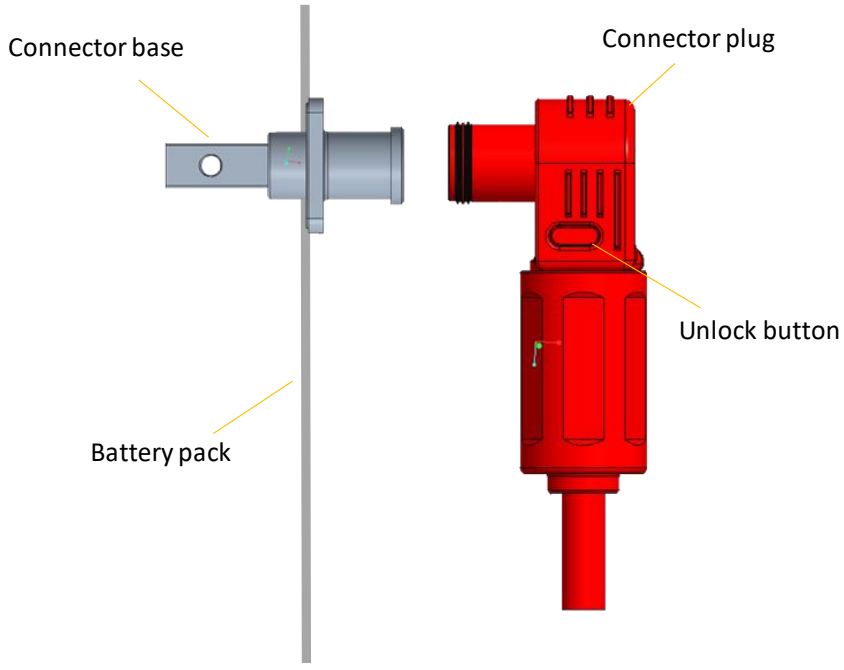

Communication wiring

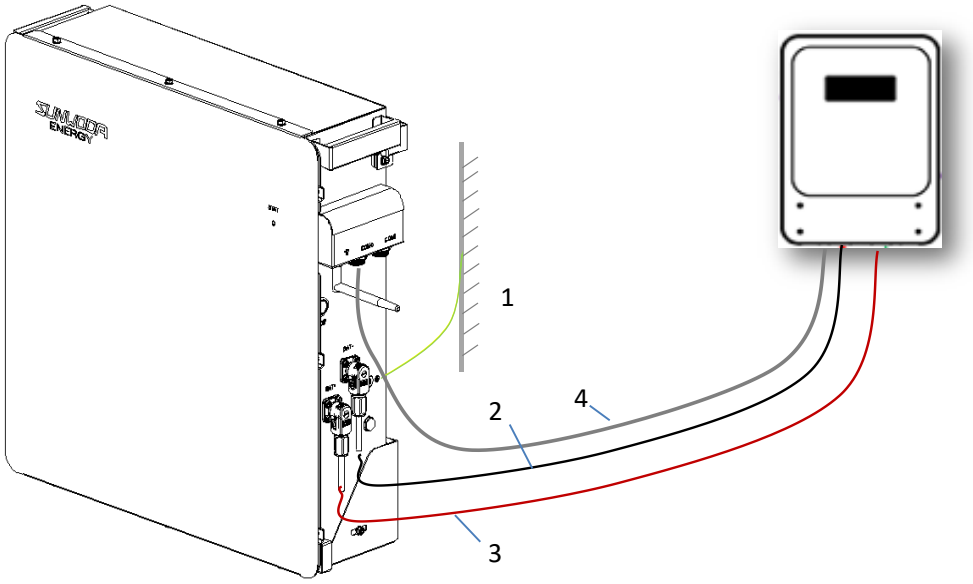

No.	Electrical connection	Wire specifications	Mark
1	Battery module grounding	M5	With grounding terminal
2	Connect the battery negative with PCS negative, typical color BLACK	3 AWG	PCS- to BAT-
3	Connect the battery positive with PCS positive, typical color red	3 AWG	PCS+ to BAT+
4	Connect the battery with PCS-CAN, typical color GRAY	8P8C Type 5 Shielded network cable	BAT-COM0 to PCS-CAN

Communication Port COM0 Interface Definition

PIN	definition
1	/
2	/
3	/
4	CANH
5	CHAL
6	/
7	/
8	/

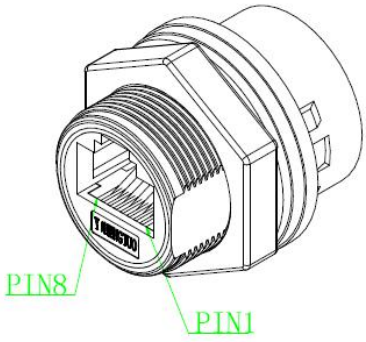

4.1.2 In parallel electrical connection guide

4 pcs MonaWall 5 in parallel connection shown as follows, PCS: 51.2V input

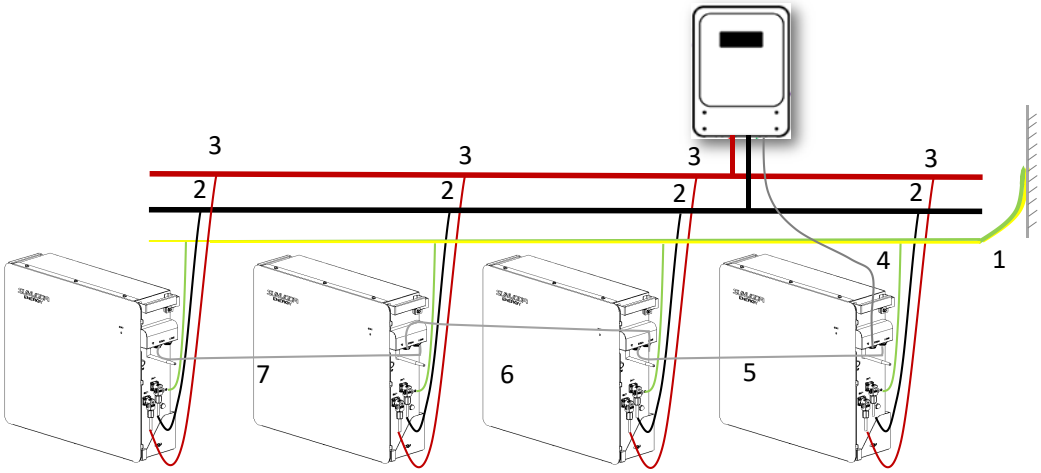

No.	Electrical connection	Wire specifications	Mark
1	Battery module grounding	M5	With grounding terminal
2	Connect the battery negative with PCS negative, typical color BLACK	3AWG	PCS- to BAT-
3	Connect the battery positive with PCS positive, typical color RED	3AWG	PCS+ to BAT+
4	Connect the battery with PCS-CAN, typical color GRAY	8P8C Type 5 Shielded network cable,2000mm	BAT-COM0 to PCS-CAN
5	Parallel communication between batteries	8P8C Type 5 Shielded network cable,2000mm	BAT-COM1 to BAT-COM0
6	Parallel communication between batteries	8P8C Type 5 Shielded network cable,2000mm	BAT-COM1 to BAT-COM0
7	Parallel communication between batteries	8P8C Type 5 Shielded network cable,2000mm	BAT-COM1 to BAT-COM0

5 System commissioning

All cables shall be connected properly

5.1 System power on

① Press POWER button for more than 3s, the system start up and have output voltage, LED is light up.

② Switch on the inverter (if inverter has the switch button)

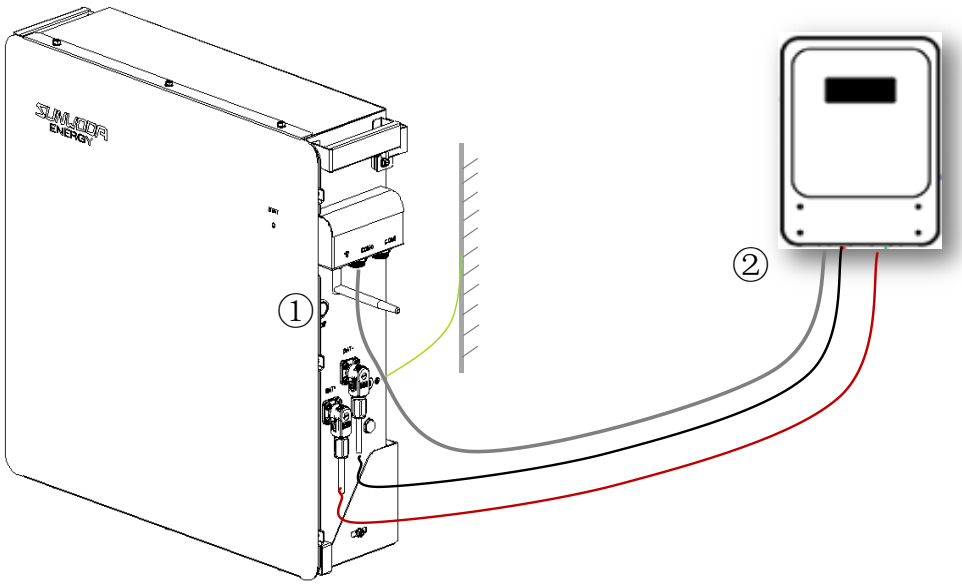

5.2 System power off

① Switch off the inverter (if inverter has the switch button)

② Press POWER button for more than 3s, the system is closed, LED go out.

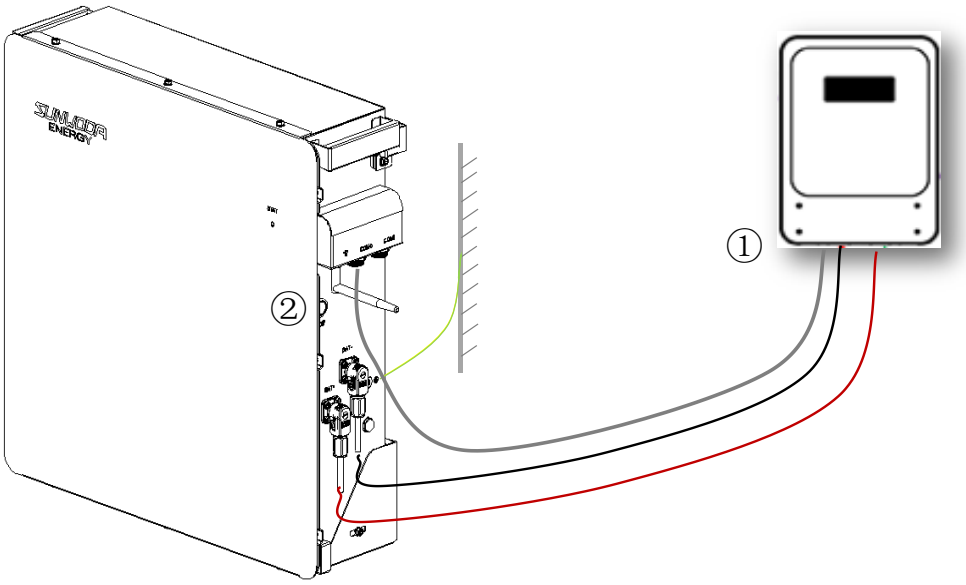

5.3 System configuration

(1)Download and install SOLARMAN Smart APP

If you are an household user, please scan QR code below to download SOLARMAN Smart APP.

Or you can log in to https://home.solarmanpv.com

SOLARMAN Smart

(2)USER MANUAL for SOLARMAN Smart APP

Please make sure Bluetooth and WiFi are ON and the router can connect to the network normally.

① Registration

Go to SOLARMAN Smart and register.

Click "Register" and create your account here.

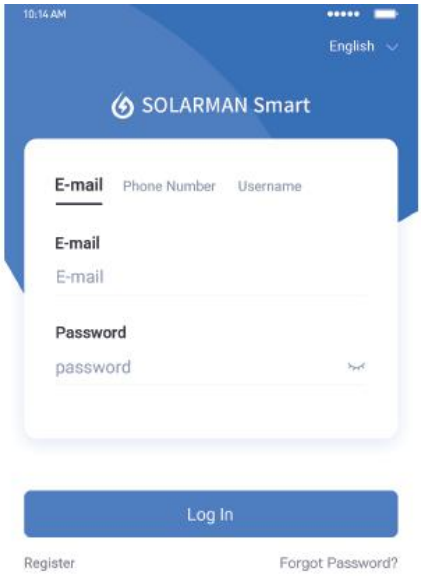

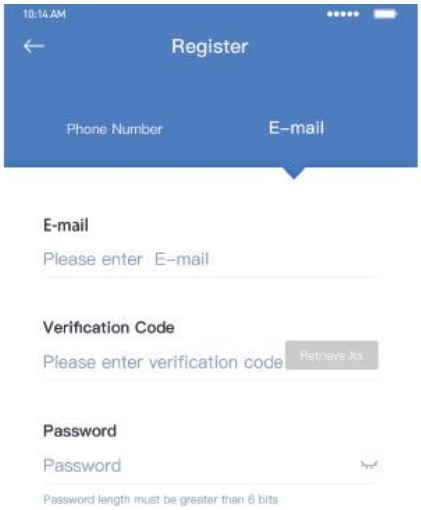

②Create a Plant

Click "Add Now" to create your plant.

Please fill in plant basic info and other info here.

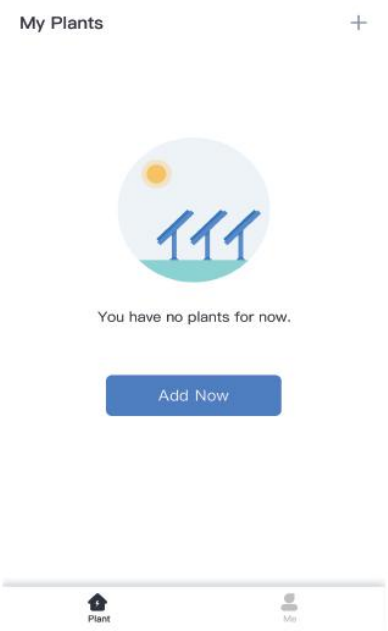

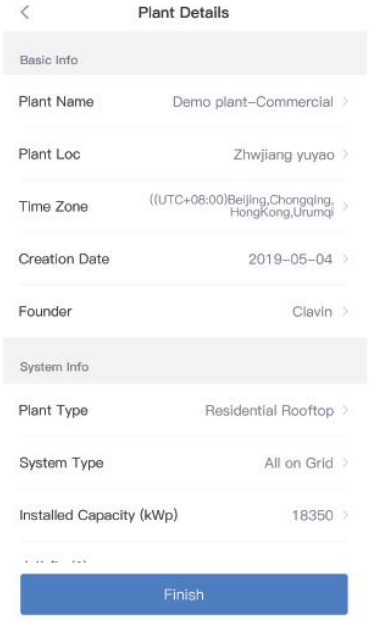

③Add a Logger

Method 1: Enter logger SN manually.

Method 2: Click the icon in the right and scan to enter logger SN

You can find logger SN in the external packaging or on the logger body.

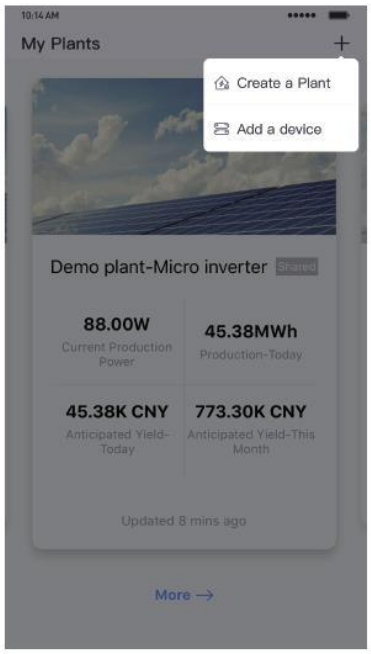



④Network Configuration

Step 1: Click“Go to Configure”to set the network. (Please make sure Bluetooth and WiFi are ON.)

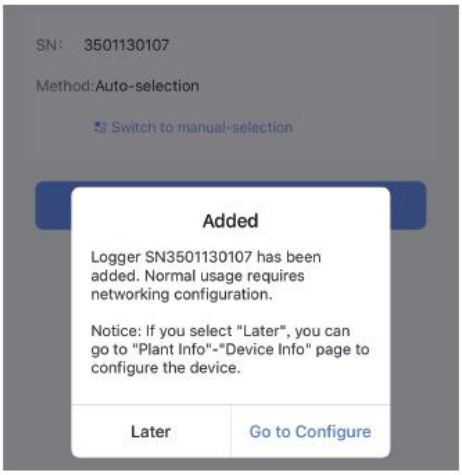

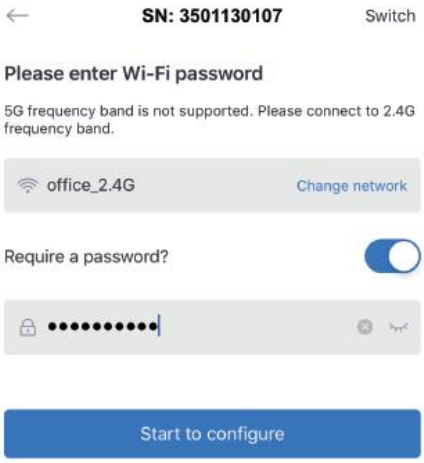

Step 2: Please wait for a few minute. Then click "Done" and view plant data.



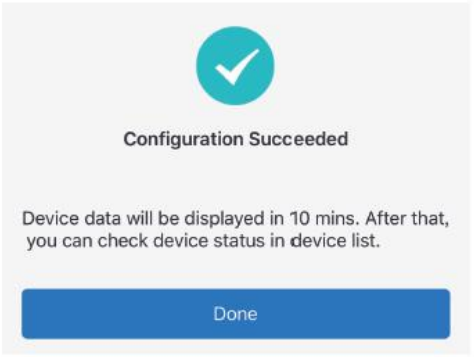

Notice:
5G WiFi is not supported .

Step 3: The battery data view click:logger—→Battery—→Device parameters—→Dipped battery project can see battery data information.

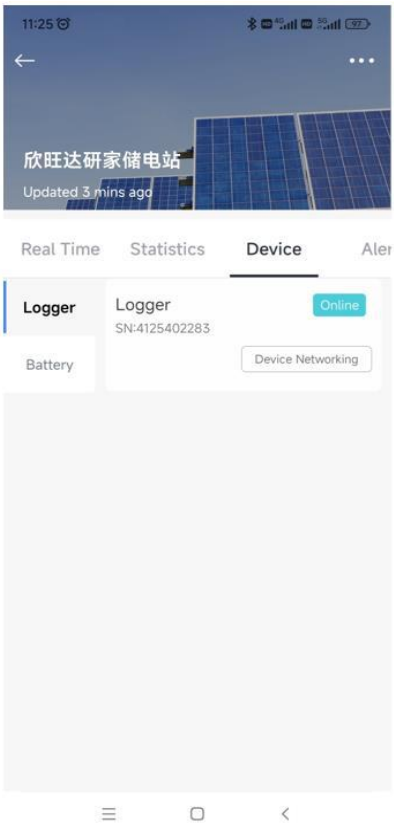

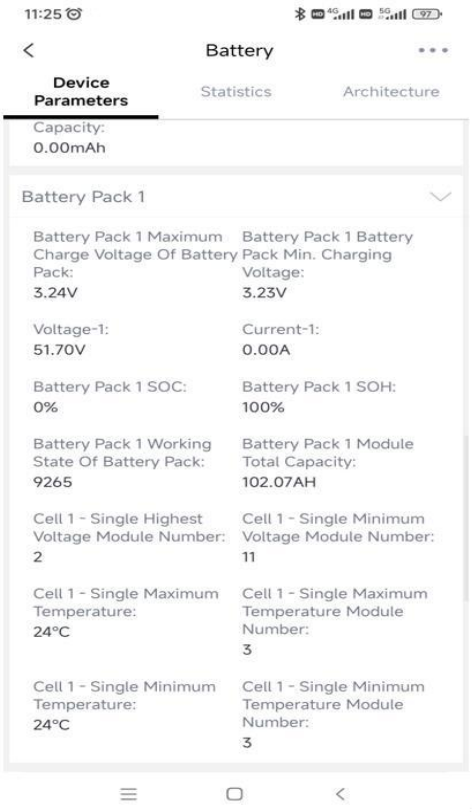

Step 4: Inverter protocol parameter configuration—→Debice parameters—→remote control—→Inverter manufacturer—→Select the corresponding inverter brand parameters—→Setup

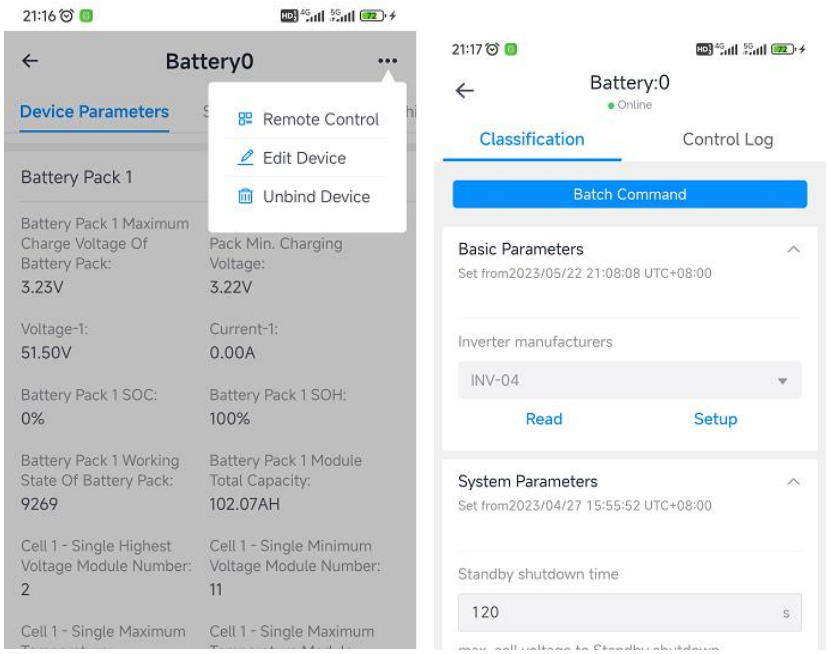

Please refer to the table below to set inverter manufacturer parameters.

Inverter manufactures	APP setting
Default	INV-01
Sacolar	INV-02
Goodwe	INV-03
Deye	INV-04
SMA	INV-05
Victron	INV-06
Solis	INV-07
Selectronic	INV-08
MEGAREVO	INV-09
LUXPOWER	INV-10

6 Maintenance and troubleshooting

6.1 Routine maintenance

- Maintenance charge every 6 months

From the date of manufacturer shipment, the battery shall be maintained every 6 months. Action must be taken in case SOC reaches 0% according to,

Ambient temperature	**Must be recharged within**
(45, 50] °C	7 days
(35, 45] °C	15 days
≤35°C	30 days

- Disconnect the battery if not being used

  BMS consumes power even when the battery is not being used. Disconnect the battery output to prevent the battery from becoming empty. For store-away, make sure the SOC is between 45% and 55% before disconnect.

- Check the battery system regularly. Contact your support if any anomaly detected.

6.2 Panel LED lights

On the battery module panel has a red and green double color LED lamp, used to indicate the battery module, protection & normal fault, low battery status.

Battery status	LED light status	Priority
To turn it off	Extinguish	1
The normal operation	●Green light always on	4
Protect & fault	●Red light always on	2
Low battery	★Taken the green LED lights flashing	3
Note：●Refers to the normally on，★It refers to flashing		

6.3 Fault checklist

Fault	**Cause**	**Solution**
POWER button no response	Damaged POWER button	Repair or replace the control module
	Damaged cable or poor contact	Please contact the supplier
Short discharge time	battery SOC is low	Keep the product charged continuously and keep the energy storage battery system fully charged
	low ambient temperature	Guarantee the product to work within the recommended suitable temperature range
	Product overload	Check load status and remove non-essential loads
	Batteries age and capacity decreases	To replace the battery, please contact the supplier for the battery and its components
	Internal failure	Log in to the SOLARMAN APP to view the fault information and contact the supplier
Unable to charge and discharge	Battery report charging or discharging protection failure	Log in to the SOLARMAN APP to view the fault information and contact the supplier
	After the battery is discharged to the SOC protection value, it needs to be charged for a period of time before it is allowed to discharge.	The battery is charged to the SOC value set by the restart
	battery over temperature	Stand at room temperature for more than 3 hours
After the system is powered on, the LED cannot be lit	LED failure	Please contact the supplier to repair or replace the control module
The LED cannot wake up during system operation	1. If the LED is off, the POWER button is faulty or the button wiring is loose 2. If the LED still does not light up	Please contact the supplier to repair or replace the control module

	after restarting, the LED is faulty	
Abnormal battery communication	Communication disconnection	Check whether the battery stack is installed reliably.
Abnormal Bluetooth connection	bluetooth account connect error	Check whether the paired Bluetooth is consistent with the installed product
Abnormal WiFi connection	1. The WiFi connection is misconfigured 2. The WiFi module is abnormal and the line connection is abnormal	1. Check if the battery WiFi connection configuration is correct 2. Check whether the antenna is installed or connected reliably
The inverter is powered on for the first time through the battery, and the battery reports short-circuit protection	The parallel capacitor value of the input terminal on the battery side of the inverter is large	Battery protection can be automatically restored
Inverter won't start	The battery voltage is too low or the SOC is lower than the shutdown protection value	Charge the battery after starting the inverter from the grid

7 Warehouse storage guidelines

7.1 Packaging guidelines

Lithium-ion batteries is recognized as dangerous goods. The packaging requirements for battery products are as follows:

a. The packaging manufacturer with the packaging qualification for dangerous goods is responsible for providing product packaging, and the packaging manufacturer has a record in the local Commodity Inspection Bureau;

b. After the packaging manufacturer completes the packaging, the supplier needs to apply to the Commodity Inspection Bureau, and the Commodity Inspection Bureau will provide the "Dangerous Package Product Use Inspection Sheet" and

c. "Dangerous package product performance inspection sheet", and complete the dangerous package commodity inspection;

d. All battery packs should be packaged with product instruction manuals. The packaged product should be placed in a dry, dust-proof and moisture-proof packing box;

e. The product name, model, quantity, gross weight, manufacturer, and ex-factory date should be marked on the outside of the packing box.

f. The necessary signs such as "upward" and "fear of fire" shall meet the requirements of GB/T 191;

g. The packing method is: packing in a carton with molded foam buffer material in the carton;

h. Accessories packaging: single accessories are first fastened with cardboard or plastic film or braided straps, neatly placed in the carton, and filled with regular fillers (foam pads, cardboard, etc.) to prevent the accessories from shifting in the box. The following documents should be included with the product when leaving the factory:

   1) Product certificate (both in Chinese and English);

2) Product use (installation) manual (both in Chinese and English);

3) Product packing list (both in Chinese and English);

4) Factory inspection report (both in Chinese and English).

i. Clean battery

j. Regular cleaning of the battery system is recommended. If the case is dirty, use a soft dry brush or dust collector to remove the dust. Cleaning liquid materials include solvents, abrasives, etc. Corrosive liquids should not be used to clean the housing.

And then packing,

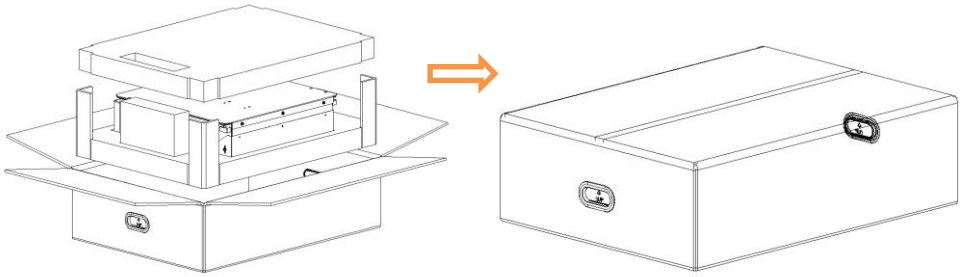

830*620*240, mm, H*W*D (PACKING DIMENSION)

7.2 Storage

The battery pack is stored in a clean, dry and ventilated room with an ambient temperature of 25°C±5°C and a relative humidity of not more than 75%. The battery pack has a state of charge of 45% to 55%. Avoid contact with corrosive substances and keep away from fire and heat sources.

8 Dispose of used batteries

Comply with applicable local regulations for the disposal of electronic waste and used batteries.

- Do not mix with your household waste.
- Do expose the battery to high temperatures or direct sunlight.
- Do not expose batteries to high humidity or corrosive environments.

Contact supplier or original manufacturer for disposal options.

9 Detailed parameter

Table-9 MonaWall 5 parameter

Item	Parameter
Product name	MonaWall 5
Model	B051100P04
Cell type	LFP
Compatible with cell models	SBP-01-1000 IFP50160116A-102Ah
Connection	1P16S
Rated voltage	51.2V
Rated energy	5kWh
Max. in Parallel No.	4
Max. energy	20kWh
Working voltage range	44.8V~55.2V
Communication	CAN/WiFi
Rated charging and discharging current	50A
Maximum charging and discharging current	100A
Standard charging method	Constant current with limited voltage(constant voltage:55.2V, cutoff charging current 5A), long time floating charge is not recommended
Protection function	Charging over voltage, discharging under voltage, over current, over temperature, short circuit protection
Cycle life	6000 cycles (25℃, 0.5C/0.5C, 90%DOD, residual capacity 70%)
Dimension	544*533*147 ,mm, W*D*H
Weight	53kg
Internal resistance	<30mΩ
Dissipation	Natural dissipation
Working ambient temperature	Charging: [0,50]℃ Discharging: [-20,50]℃
Working altitude	<4000m, Derating above 2000m
Working ambient humidity	10%~90%RH
Storage temperature	-10℃~35℃
Enclosure rating	IP65
Certificate	IEC62619,CE,UN38.3