felicitysolar®

Make life full of hope

USER MANUAL



Model

FLA48100UG1

51.2V/5.12kWh

www.felicitysolar.com

Contents

1. Safety Introductions 1

1.1 Warning 1

1.1.1 Before Connecting 1

1.1.2 In Using 1

1.2 Caution 2

2. Transportation 3

3. Introductions 4

3.1 Symbol Definition 4

3.2 Brief Introduction 4

3.3 Features 5

3.4 Product Overview 5

3.4.1 External Packaging 5

3.4.2 Product Appearance Display 5

3.5 LCD Display Icons 7

3.5.1 ON/OFF or SOC Led(Mode or SOC) 7

3.6 Battery Management System(BMS) 8

3.7 System Connection Diagram 8

4. Installation and Configuration 9

4.1 Preparations for Installation 9

4.1.1 Safety Requirement 9

4.1.2 Installation Environment 9

4.1.3 Tools 9

4.2 Unpacking Inspection 10

4.3 Installation Procedure 11

4.3.1 Mounting the Battery 11

4.3.2 Cable Connection 17

4.3.3 Batteries in parallel 18

4.3.4 Series connection is not allowed 18

5. Operation 19

5.1 Description for Communication port 19

5.2 Switch On/Off 19

6. Maintenance and Troubleshooting 20
6.1 Storage 20
6.2 Maintenance Troubleshooting 21
6.2.1 Analysis and Treatment of Common Faults 21
7. Battery recovery 22
7.1 Recovery process and steps of cathode materials 22
7.2 Recovery of anode materials 22
7.3 Recovery of diaphragm 22
7.4 List of recycling equipment 22
Appendix I 23

Revision History

Revision NO.	Revision Date	Revision Reason
1.0	2025.6	First Published

About This Manual

The manual mainly describes the introduction, installation, operation, and maintenance. Please read this manual carefully before installation and operation. Keep this manual for future reference.

How to Use This Manual

Please read this manual and all relevant documents thoroughly before carrying out any operations on the battery. Ensure that the documents are stored securely and remain accessible at all times. The content may be periodically revised or updated to reflect product improvements.

1. Safety Introductions

1.1 Warning

1.1.1 Before Connecting

- After unpacking, inspect the product and packing list carefully. If any damage is found or parts are missing, please reach out to your local retailer for assistance.
- Before installation, be sure to cut off the grid power and make sure the battery is in the turned-off mode.
- Ensure proper wiring by connecting the positive and negative cables correctly and avoiding any short circuits with external devices.
- Directly connecting the battery to AC power is strictly prohibited.
- The battery system must be properly grounded, with a grounding resistance of less than 1Ω.
- Verify that the electrical parameters of the battery system are fully compatible with the connected equipment.

1.1.2 In Using

- If the battery system needs to be moved or serviced, ensure that the power is disconnected and the battery is fully powered down.
- Keep the battery away from water and fire.
- Connecting the battery with a different type of battery is strictly prohibited.
- Do not operate the batteries with a faulty or incompatible inverter.
- Disassembling the battery is not allowed.
- In the event of a fire, only dry powder fire extinguishers should be used; liquid fire extinguishers must not be used.
- Please refrain from opening, repairing, or disassembling the battery unless performed by Felicitysolar staff or personnel authorized by Felicitysolar. Any consequences or responsibilities arising from improper operation or violations of design, manufacturing, or equipment safety standards will not be assumed by us.

1.2 Caution

- Our products undergo rigorous inspection before shipment. If you notice any unusual signs, such as the device casing bulging, please contact us promptly.
- The product must be properly grounded prior to use to ensure safety.
- To ensure correct usage, verify that the parameters of the connected devices are compatible and matched. Avoid mixing batteries from different manufacturers, types, or models, as well as using old and new batteries together.
- The ambient environment and storage methods can affect the product's lifespan. Please adhere to the operating environment guidelines to ensure the device functions optimally.
- For long-term storage, recharge the battery every six months, ensuring the charge exceeds 80% of its rated capacity.
- Recharge the battery within 18 hours after it has fully discharged or when over-discharge protection mode is triggered.
- The formula for calculating theoretical standby time is: T = C/I (where T represents standby time, C is the battery capacity, and I is the total current of all loads).

2. Transportation

The battery module can only be transported in an upright position.



√



×

- Smoking is prohibited in the vehicle during transportation or in the vicinity during loading and unloading

- The dangerous goods transport vehicles shall meet relevant regulations concerning roadtransportation and shall be equipped with two tested CO2 fire extinguishers.

- If possible, do not remove the transport packaging before arrival at the installation site.Before removing the transport protector, check if the transport packaging is damaged.

- Improper transport of battery modules may cause injury. It could cause injury if it falls or slips. Use only suitable transport and lifting equipment to ensure safe transport.

- Wear safety shoes to avoid the danger of injury. When transporting the battery module,their parts may be crushed due to their heavy weight. Therefore, all persons involved in transportation must wear safety shoes with toe caps. Please observe the safety regulations for transportation at the end customer's site, especially during loading and unloading.

- During transportation and installation of unpacked battery storage cabinets, the risk of injury increases, especially on sharp metal panels. Therefore, all personnel involved in transportation and installation must wear protective gloves.

- Improper vehicle transportation can cause injury. Improper transportation or impropertransportation locks may cause the load to slip or overturn,resulting in injury.

- The transportation of Li-Ion batteries is classified under hazard category UN3480, Class 9. For transport via sea, air, or land, the batteries are categorized under Packaging Group PI965 Section I. Use Class 9 Miscellaneous Dangerous Goods and UN Identification labels for transportation of lithium-ion batteries which are assigned Class 9. Please refer to the relevant transportation documentation for details.

3. Introductions

3.1 Symbol Definition

Danger! Serious physical injury or even death may occur if not follow the relative requirements.	Install the product out of reach of children
Caution, risk of electric shock.	Do not place nor install near flammable or explosive materials
In case of electrolyte leakage, keep leaked electrolyte away from eyes or skin.	Disconnect the equipment before carrying out maintenance or repair
Do not connect the Pack's positive(+) and negative(-)terminal reversely.	Societe Generale de Surveillance S.A.
Observe precautions for handling electrostatic discharge sensitive devices.	Instruction manual: Read the instruction manual before starting installation and operation.
Caution, risk of electric shock, energy storage timed discharge	CE mark: The inverter complies with the CE directive.
Recyclable.	NOTE Note:The procedures taken for ensuring proper operation.
Do not use the Pack beyond specified conditions	Earth terminal: The inverter must be reliably grounded.
Take care! This Pack is heavy enough to cause serious injury.	EU WEEE mark: Product should not be disposed as household waste.

3.2 Brief Introduction

FLA48100UG1 is equipped with a lithium iron phosphate battery designed for household use. Developed based on customer needs and market demands, this advanced battery storage solution provides high-quality, reliable power for various devices. The product features a long lifespan, suitability for high-temperature environments, and a compact design that requires minimal installation space.

FLA48100UG1 features a battery management system independently developed by our team. When connected to a grid or photovoltaic system as the power source, the product can store energy by charging the battery. In the event of a power outage from the grid or photovoltaic system, the product independently supplies electricity to household loads. Additionally, multiple units can be connected in parallel to form a high-capacity, multi-module system, meeting long-term energy storage requirements.

3.3 Features

- LiFePO4: Higher safe performance and longer cycle life.
- Multiple Protection: Built-in smart BMS,Breaker and Fuse.
- Flexible Installation: Stacked installation/Rack installation/Wall-mounted installation
- Wide Compatibility: Compatible with leading inverter brands.
- High Scalability: Capacity up to 163.84kWh.
- IP21 Protection Level: Suitable for indoor use.
- Equipped with an aerosol fire extinguishing system.
- When the battery experiences overcurrent causing the fuse to blow, it can be easily replaced externally, providing great convenience.

3.4 Product Overview

3.4.1 External Packaging

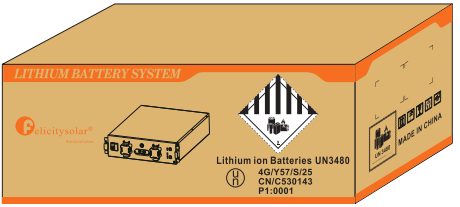

3.4.2 Product Appearance Display

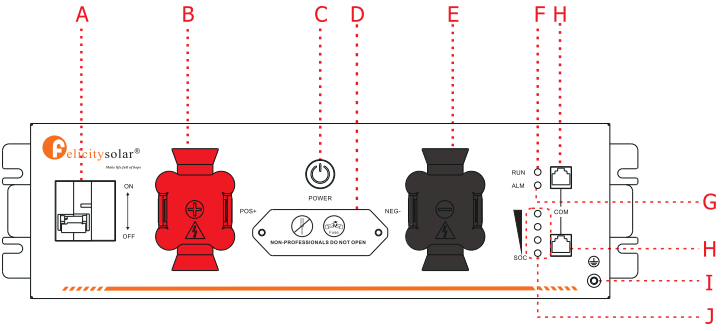

Code	Name	Definition
A	ON/OFF Switch	Circuit Protection
B	POS+	The DC output positive pole of the battery, connected to the inverter's positive pole via a cable.
C	Power/Running Status	Indicate the power on/off function: press once to turn on, press and hold for 3 seconds to turn off.
D	Fuse	Circuit protection for overcurrent
E	NEG-	The DC output negative pole of the battery, connected to the inverter's negative pole via a cable.
F	RUN	Indicates the operating status of the battery, which is always on when running normally.
G	ALARM	Indicates the fault status of the battery, which lights up when the fault occurs
H	COM	When the system is used in parallel: This CAN/RS485 communication socket is connected to the COM interface through communication cable.
I	PE	Shell ground connection
J	SOC	Indicate the battery's SOC

3.5 LCD Display Icons

The: LED shows the SOC of module N.

				
100%	75%	50%	25%	Flashing SOC<10%

Note: The battery need to be fully charged for at least once in one month to ensure the accurate SOC calculation.

3.5.1 ON/OFF or SOC Led(Mode or SOC)

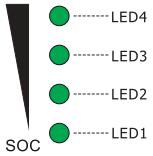

LED Definition	ON/OFF		LED Status				Fault Info
	Green LED	Red LED	LED1	LED2	LED3	LED4	
Power OFF	OFF	OFF	OFF	OFF	OFF	OFF	
Power ON	OFF	ON	ON	ON	ON	ON	
Stand By	OFF	OFF	SOC				SOC<10%(Default):LED1 Flash
Normal	ON	OFF	Running/SOC				SOC<10%(Default):LED1 Flash
Discharge	ON	OFF	SOC				SOC<10%(Default):LED1 Flash
Charge	Flash	OFF	Running				
Low Power	Flash	OFF	OFF				
Fault	OFF	ON	ON	OFF	OFF	OFF	Battery Voltage High
			OFF	ON	OFF	OFF	Battery Voltage Low
			ON	ON	OFF	OFF	Cell Voltage High
			OFF	OFF	ON	OFF	Cell Voltage Low
			ON	OFF	ON	OFF	Charging Current High
			OFF	ON	ON	OFF	Discharging Current High
			ON	ON	ON	OFF	BMS Temperture High
			OFF	OFF	OFF	ON	BMS Temperature Low
			ON	OFF	OFF	ON	Cell Temperture High
			OFF	ON	OFF	ON	Cell Temperature Low
			ON	ON	OFF	ON	Current Sensor Abnomal

3.7 System Connection Diagram

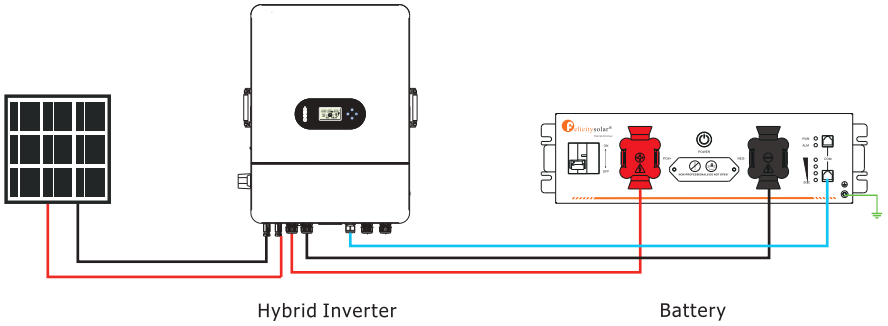

Figure 3-1 Single Battery System Connection Diagram

When paralleling multiple battery packs, please use a combiner box or a copper busbar.

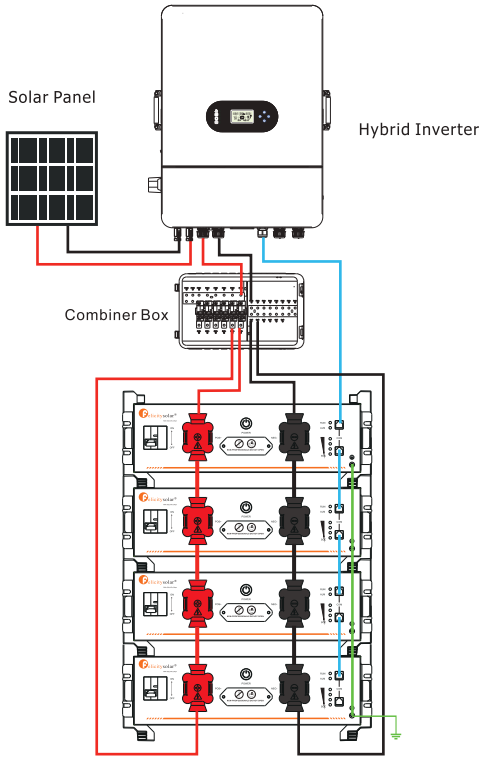

Figure 3-2 Multiple Battery Parallel System Connection Diagram

4. Installation and Configuration

4.1 Preparations for Installation

4.1.1 Safety Requirement

This system must only be installed by personnel trained in power supply systems and possessing adequate knowledge of such systems.The safety guidelines outlined below, along with applicable local safety standards, must be strictly adhered to during installation.

- All circuits interfacing with this power system and carrying external voltages below 48V must comply with SELV requirements as specified in the IEC60950 standard.
- If working within the power system cabinet, ensure the system is completely powered down, and all battery devices are switched off.
- The distribution cables should be arranged systematically and equipped with protective measures to prevent accidental contact while operating power equipment.

4.1.2 Installation Environment

- Working temperature: -20℃~+55℃
- Charging temperature range: 0℃~+55℃
- Discharging temperature range: -20℃~+55℃
- Storage temperature: 0℃~+35℃
- Relative humidity: 5% ~ 95%
- Elevation: ≤2000m

Operating environment: Suitable for indoor installation at locations shielded from direct sunlight, wind, conductive dust, and corrosive gases.
Ensure the following conditions are met:

- The installation site should be distant from the sea to prevent exposure to saltwater and high humidity.
- The ground at the installation location must be flat and level.
- The site should be free of flammable or explosive materials.
- Optimal ambient temperature: 20°C to 30°C.
- Avoid areas with excessive dust or clutter.

Mount the battery in the optimal orientation as shown below.



4.1.3 Tools



Screw Driver



Crimping Modular



Safety Shoes



Multimeter



Safety Gloves



Safety Goggles



Plier



Ribbon



Electric drill

4.2 Unpacking Inspection

- Upon arrival at the installation site, loading and unloading should strictly follow the established rules and procedures to prevent exposure to sunlight and rain.
- Before unpacking, verify the total number of packages against the shipping list attached to each package, and inspect the outer cases for any signs of damage. After unpacking, carefully check for loose or damaged wiring and contacts, cracks, deformations, leaks, or any other form of damage. If any damage is detected, the battery must be replaced immediately. Do not attempt to charge or use a damaged battery, and avoid contact with any liquid from a ruptured battery.
- During unpacking, handle all components with care to protect the surface coating from damage.

No.	Description	Quantity	Picture
1	User manual	1	
2	Warranty card	1	
3	Power Cable:0.16 meters,25mm², allows for charging and discharging up to 120A, used for power connection between battery pack modules	2	
4	Ground Wire: used for grounding connections between battery pack modules.	1	
5	Communication Cable:Gray, used for RS485 communicationwith Felicity inverters (Model:IVCM,IVEM,IVPS/M IVGM)	1	

6	Communication Cable: Blue, Used for communication with inverters from other brands.	1	
7	Communication Cable: Black,used for parallel communication between battery packs	1	
8	Signal Terminal: Used for creating custom communication cables	2	
9	OT Terminal *4PCS: Diameter 8.5mm, used for 25mm² (Power cables need to be purchased by yourself)	4	
10	Screws: The M5X12 4PCS screws are fixed for use in the cabinet	4	
11	Wall bracket: Used for battery pack wall mounting(Optional) Accessories： M6X50 4PCS,M5X12 4PCS	2	
12	Stacked installation bracket (Optional) Accessories：M4X12 4PCS M5X20 8PCS M6X25 4PCS	4	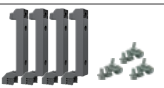

4.3 Installation Procedure

4.3.1 Mounting the Battery

(a) Stack mounting mode

(Specific module brackets need to be purchased separately)

Step1: After taking out the product, use a cross-head screwdriver to remove the hanging ear pieces on the left and right sides of the chassis.

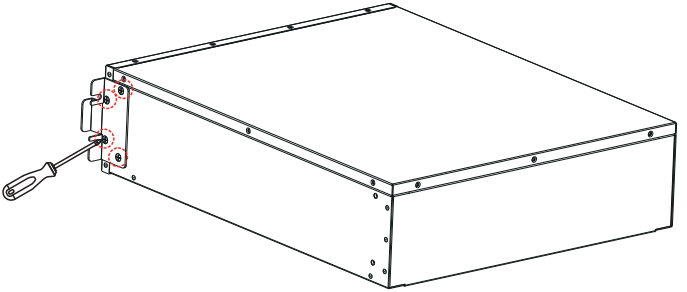

Step2: Take out the customized module bracket, align it with the corresponding hole on the chassis as shown in the picture, and lock the fixing screws.

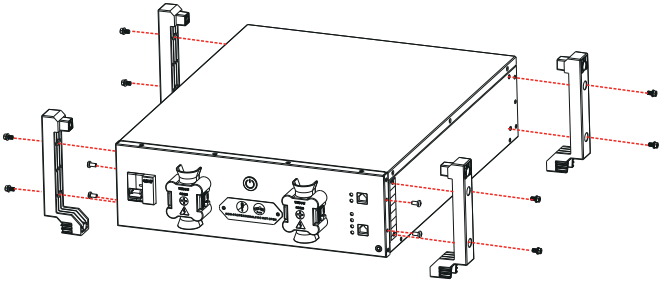

Step3: As shown in the figure, the stacked positioning installation is carried out by relying on the customized module brackets, and the fixing screws are locked at the assembly points of the module brackets

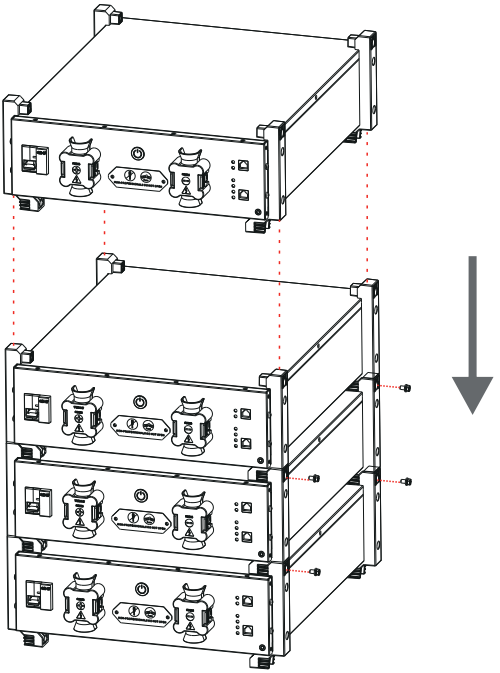

(b)Wall-mounted method

The installation location description should meet the size requirements of the figure below.

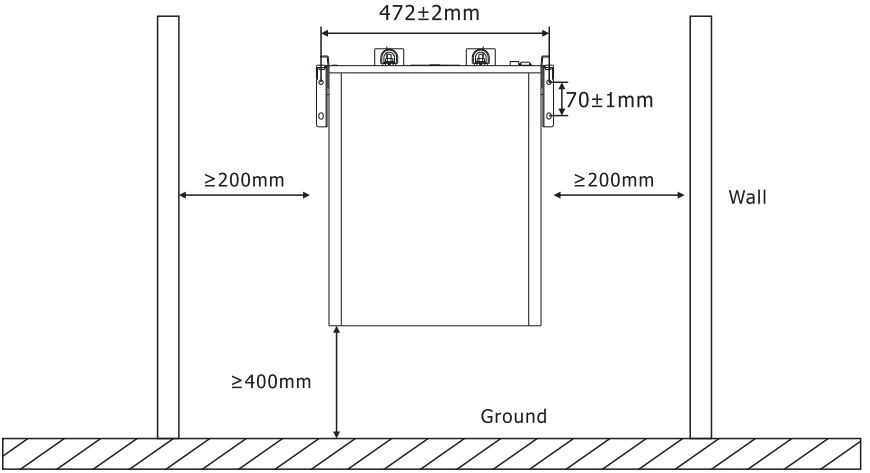

Step1:Mark at the correct points according to the following size intervals, and then use an 8mm diameter drill bit to drill four holes.

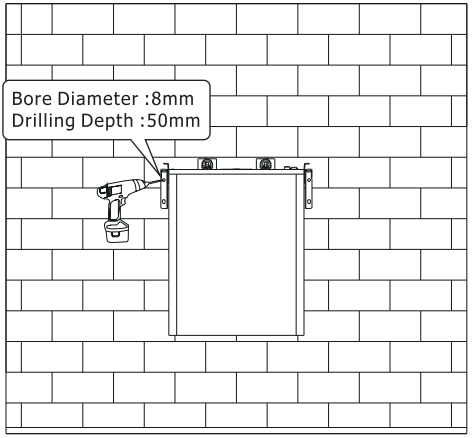

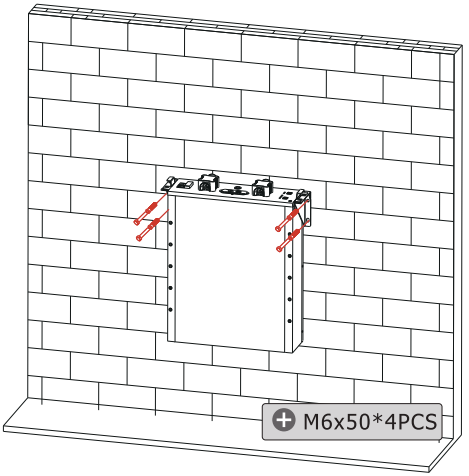

Step2: Place the product on the wall-mounted accessory and fix it with four M5X12 screws. Then you can start using the product.

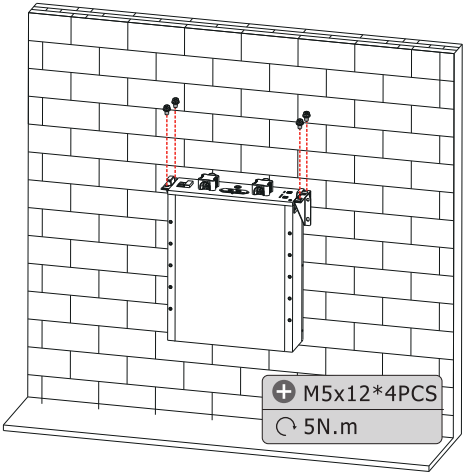

(c)Rack mounting mode

(It is necessary to purchase the corresponding 3U 19-inch rack cabinet for use)

Step1. Secure the rack to the wall

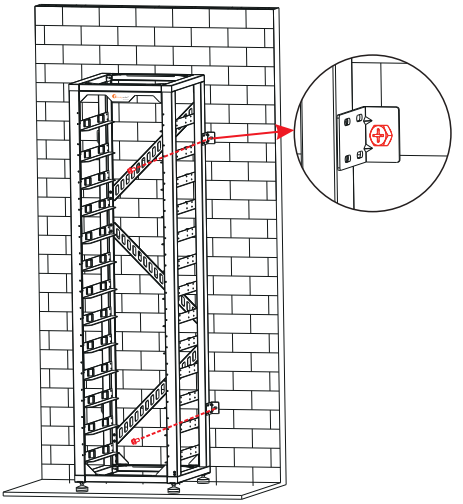

Step2. Insert the machine into the rack and secure the machine to the rack using four M5*12 screws

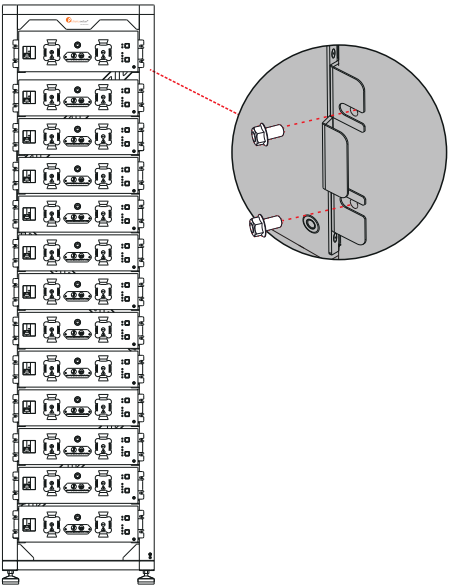

Note:

If the fuse is blown, please follow the steps below:

Step 1: Use a Phillips-head screwdriver to remove the screws from the fuse cover.

Step 2: Open the fuse cover, remove the old fuse, and replace it with the new one.

Step 3: Reattach the fuse cover and secure it in place.

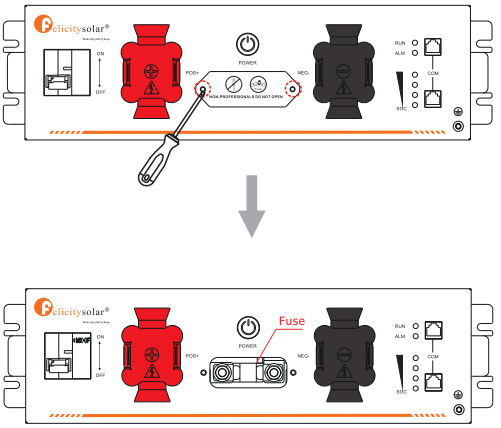

Fuse(Non professionals are not allowed to open this cover)

4.3.2 Cable Connection

Step 1: Put on protective gloves;

Step 2: Install the battery grounding cable;

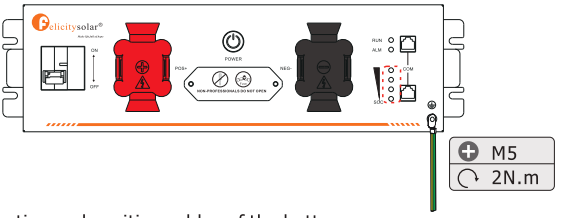

Step 3: Install the negative and positive cables of the battery;

a. As shown in the figure, please pinch the buckle positions on both sides of the output terminal and remove the protective cover backward.

b. Use the M8 socket tool to remove the M8 nut;

c. Connect the negative power cable to the negative output terminal of the battery

d. Connect the positive power cable to the positive output terminal of the battery connected to the cable.

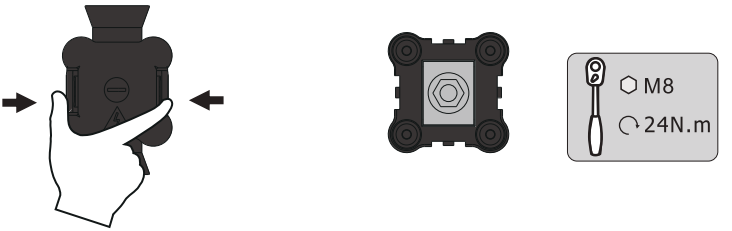

Step 4: Install the communication connection lines between the battery and the inverter;

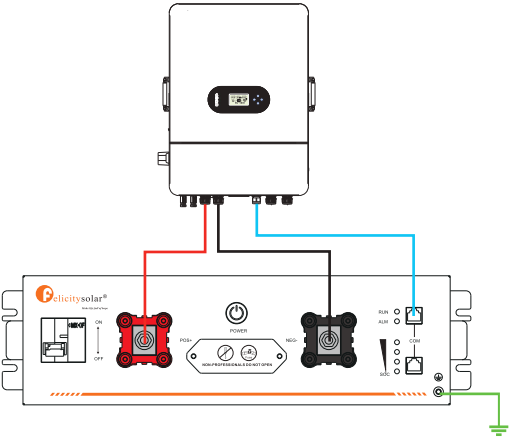

Step 5: Cover the protective cover of the output terminal.

4.3.3 Batteries in parallel

The FLA48100UG1 support to be connected in parallel for expansion. If you need one more battery bank to work in parallel mode, connect the battery as shown in the following figure.

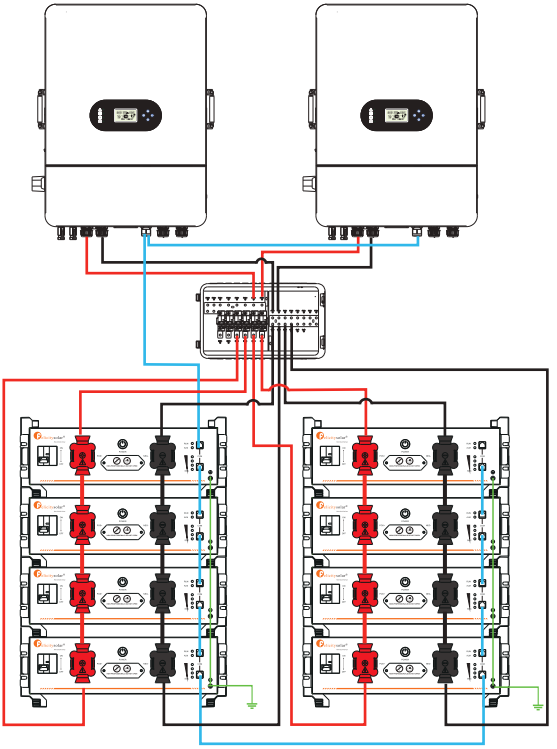

4.3.4 Series connection is not allowed

1)The batteries can be connected in parallel. Series connection is not allowed.Use in upright position only.

2)The batteries are not allowed to connected with PWM controller for chargingSpecial Attention: Due to the built-in protection board of the lithium battery pack is with over-discharge protection function, it is strongly recommended to stop using the load when the battery pack is over-discharged. The battery pack cannot be repeatedly activated fordis charge. Or the battery may be failed to be activated by the AC or PV activation cable It requires a special charging activation method), so cannot be charged. Therefore, when the battery pack is low power, please charge the battery as soon as possible when main power or solar energy is available.

5. Operation

5.1 Description for Communication port

BATTERY-Felicitysolar

Picture	Pin	Color	Definition
P1……P8 	1	ORG-WH	CAN-GND
	2	ORG	+5V-BUS
	3	GN-WH	CANL-PCS
	4	BU	CANH-PCS
	5	BU-WH	RS485-B
	6	GN	RS485-A
	7	BN-WH	CANL
	8	BN	CANH

INVERTER

Pin	Color	Definition	Picture
1	ORG-WH	/	P1……P8 
2	ORG	/	
3	GN-WH	/	
4	BU	/	
5	BU-WH	RS485-B	
6	GN	RS485-A	
7	BN-WH	/	
8	BN	/	

5.2 Switch On/Off

Power on steps:

Step 1: Turn on the inverter❶;

Step 2: Turn on the battery breaker❷("OFF" to the "ON");

Step 3: Press the battery switch button❸.

If the batteries are connected in parallel, turning on any one of them will turn on all the others.

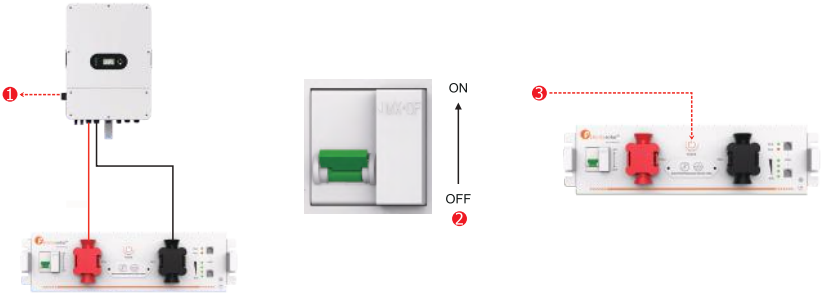

Power down steps:

Step 1: Turn off the inverter❶;

Step 2: Press and hold the battery switch button for 3 seconds❷;

Step 3: Disconnect the breaker of the battery❸ ("ON" to "OFF").

If the batteries are connected in parallel, turning off any one of them will turn off all the others.

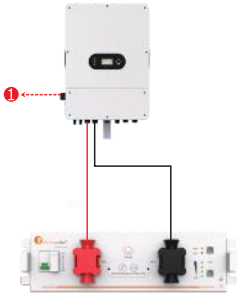

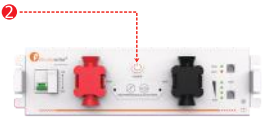

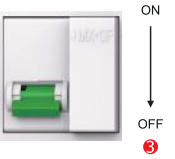

6. Maintenance and Troubleshooting

6.1 Storage

- Do not expose battery to open flame.
- Do not place the product under direct sunlight.
- Do not place the product near flammable materials. It may lead to fire or explosion in case of accident.
- Store in a cool and dry place with ample ventilation.
- Store the product on a flat surface.
- Store the product out of reach of children and animals.
- Do not damage the unit by dropping, deforming, impacting, cutting or penetrating with a sharp object.
- It may cause leakage of electrolyte or fire.
- Do not touch any liquid spilled from the product. There is a risk of electric shock or damage to skin.
- Always handle the battery wearing the insulated gloves.
- Do not step on the product or place any foreign objects on it. This can result in damage
- Do not charge or discharge damaged battery.

6.2 Maintenance Troubleshooting

6.2.1 Analysis and Treatment of Common Faults

Item	Fault phenomenon	Reason analysis	Solution
1	Unable to communicate with the inverter	The wrong communication cable was used	Use the correct communication cable to connect the battery and the inverter.
2	Battery does not fully charge	The charging voltage set on the inverter is too low	Set the charging voltage on the inverter according to the recommended value in the battery manual
3	Inaccurate SOC display	The battery's SOC has not been calibrated	The SOC will automatically calibrate after one full charge cycle. First, discharge the battery to 0%, then charge it to 100%.
4	High current charging & discharging causes output cutoff	The charging & discharging current set on the inverter is too high	Set the charging & discharging current on the inverter according to the recommended values in the battery manual
5	Battery output is interrupted due to high current during charging and discharging	The charging and discharging current settings on the inverter are too high	Set the charging and discharging current on the inverter according to the recommendations in the battery manual
6	When multiple batteries are connected in parallel, battery data on the inverter is missing or incorrect.	The parallel connection of the batteries is not set up correctly	Check the communication cables between the batteries
7	The battery indicates it is charging, but the SOC does not change.	The ambient temperature is too low, preventing the battery from charging.	Charge the battery in an indoor environment that meets the operating temperature range specified in the manual

7. Battery recovery

Aluminum, copper, lithium, iron, and other metal materials are extracted from discarded LiFePO4 batteries using an advanced hydrometallurgical process, achieving a comprehensive recovery efficiency of up to 80%. The detailed process steps are outlined as follows.

7.1 Recovery process and steps of cathode materials

The aluminum foil used as collector is an amphoteric metal. Initially, it is dissolved in a NaOH alkaline solution, allowing aluminum to enter the solution as $NaAlO_2$. After filtration, the filtrate is neutralized with a sulfuric acid solution, resulting in the precipitation of $Al(OH)_3$. When the pH exceeds 9.0, the majority of the aluminum precipitates, and the resulting $Al(OH)_3$ can achieve chemical-grade purity upon analysis.

The filter residue is treated with sulfuric acid and hydrogen peroxide, allowing lithium iron phosphate to dissolve into the solution as $Fe_2(SO_4)_3$ and Li_2SO_4, while separating it from carbon black and the carbon coating on lithium iron phosphate. After filtration, the pH of the filtrate is adjusted using NaOH and ammonia solution. Iron is first precipitated as $Fe(OH)_3$, followed by the precipitation of the remaining solution using a saturated Na_2CO_3 solution at 90°C.

7.2 Recovery of anode materials

The recovery process for anode materials is relatively straightforward. After separating the anode plates, the copper purity exceeds 99%, making it suitable for further refining into electrolytic copper.

7.3 Recovery of diaphragm

The diaphragm material is primarily non-hazardous and holds no recycling value.

7.4 List of recycling equipment

Automatic dismantling machine, pulverizes, wet gold pool, etc.

Appendix I

Model	FLA48100UG1
Energy	5.12kWh
Battery Type	LiFePO4
Nominal Voltage	51.2V
Operating Voltage	44.8-57.6V
Recommend Charge/Discharge Current	50A
Max.Continuous Charge/Discharge Current[1]	100A
Peak Charge/Discharge Current(15s)	125A
Max.Charge/Discharge Power	5,000W
Peak Charge/Discharge Power(15s)	6,250W
Depth of Discharge(DOD)	≥95%
Scalability	Up to 32 units in parallel(163.84kWh)
Communication	RS485 / CAN
Protection Level	IP21
Cycle Life	≥6000 Cycles(25°C±2°C,0.5C/0.5C,90%DOD,70%EOL)
Charging Temperature Range	0-55°C
Discharging Temperature Range	-20-55°C
Display	LED
Installation	Stacked installation/Rack installation/Wall-mounted installation
Protection	Built-in smart BMS, Breaker, Fuse
Warranty	7 Years
Net Weight	43kg
Gross Weight	47kg
Product Dimension	575x483x133mm
Package Dimension	642x542x241mm
[1]Max.continuous charge/Discharge current is affected by temperature and SOC.	

*In the absence of communication, please follow the recommended settings in the table below.

Setting	FLA48100UG1
Max. Charging Voltage	57.6V
Floating Charging Voltage	57.6V
Max. Charging Current	100A*N
Cut-off Voltage	48V

Notes: "N" means the number of battery packs connected in parallel.